FUJITSU

FOUR ROOM MULTI
INVERTER

SERVICE MANUAL

Refrigerant
R410A

Outdoor unit	Indoor unit
AOTG30LAT4	ASTG07LVCA
	ASTG09LVCA
	ASTG12LVCA
	ASTG12LVCB
	ASTG09LUCA
	ASTG14LUCA
	ASTG18LFCA
	ASTG24LFCA
	ASTG24LFCB
	AUTG09LVLA
	AUTG12LVLA
	AUTG18LVLA
	UTG-UFYD-W
	ARTG09LLTA
	ARTG12LLTA
	ARTG18LLTA
	ABTG18LVTA

CONTENTS

SPECIFICATIONS 1
DIMENSIONS. 7
REFRIGERANT SYSTEM DIAGRAM . . . 13
CIRCUIT DIAGRAM 14
OUTDOOR PCB CIRCUIT DIAGRAM. . . 20
INDOOR PCB CIRCUIT DIAGRAM. 23
ERROR DETECTION. 39
PARTS (OUTDOOR UNIT) 41
PARTS (INDOOR UNIT) 46
ACCESSORIES 75

FUJITSU GENERAL LIMITED

SPECIFICATIONS

OUTDOOR UNIT

ELECTRICAL SPECIFICATIONS

TYPE		Four room multi inverter
MODEL NAME		AOTG30LAT4
COOLING CAPACITY		8.0 kW
HEATING CAPACITY		9.6 kW
POWER SUPPLY		240 V
FREQUENCY		50 Hz
RUNNING CURRENT	Cooling	9.3 A
	Heating	10.1 A
INPUT	Cooling	2.22 kW
	Heating	2.40 kW
E.E.R.	Cooling	3.60 kW/kW
	Heating	4.00 kW/kW
AIR CIRCULATION HIGH		3,300 m3/hr

FAN MOTOR

DISCRIMINATION	MFE-60TVT
COOLING	820 r.p.m.
HEATING	780 r.p.m.

NOISE LEVEL

COOLING	50dB
HEATING	51dB

COMPRESSOR AND REFRIGERANT

TYPE		Hermetic type, Inverter, 4 poles, 3-phase, DC motor, Twin Rotary
DISCRIMINATION		TNB220FPBMT
WEIGHT (with oil)		14.3 kg
PRECHARGED REFRIGERANT		3,300 g
REFRIGERANT TYPE		R410A
FULL CHARGE — Total Pipe Length	50 m	3,300 g
	60 m	3,550 g
	70 m	3,800 g
ADDITIONAL CHARGE		25 g/m
MAXIMUM PIPE LENGTH (total)		70 m
MINIMUM PIPE LENGTH (total)		20 m
MAXIMUM PIPE LENGTH (each unit)		25 m
MINIMUM PIPE LENGTH (each unit)		5 m
MAX ELEVATION (between indoor units)		10 m
(between indoor and outdoor units)		15 m

MEASUREMENT

DIMENSIONS	H x W x D	830 x 900 x 330 mm
WEIGHT	Net / Shipping	68 kg / 75 kg

INDOOR UNIT
COMPACT WALL MOUNTED

ELECTRICAL DATA

MODEL NAME	ASTG07LVCA	ASTG09LVCA	ASTG12LVCA ASTG12LVCB
CAPACITY	2.0 kW class	2.5 kW class	3.5 kW class

FAN MOTOR

DISCRIMINATION			MFD-34ROCN		
FAN SPEED	Cooling	High	940 r.p.m.	940 r.p.m.	1,010 r.p.m.
		Medium	850 r.p.m.	850 r.p.m.	930 r.p.m.
		Low	730 r.p.m.	730 r.p.m.	770 r.p.m.
		Quiet	610 r.p.m.	610 r.p.m.	610 r.p.m.
	Heating	High	940 r.p.m.	940 r.p.m.	1,010 r.p.m.
		Medium	870 r.p.m.	870 r.p.m.	930 r.p.m.
		Low	820 r.p.m.	820 r.p.m.	870 r.p.m.
		Quiet	610 r.p.m.	610 r.p.m.	650 r.p.m.
AIR FLOW	Cooling	High	640 m^3/h	640 m^3/h	700 m^3/h
		Medium	560 m^3/h	560 m^3/h	630 m^3/h
		Low	460 m^3/h	460 m^3/h	500 m^3/h
		Quiet	360 m^3/h	360 m^3/h	360 m^3/h
	Heating	High	640 m^3/h	640 m^3/h	700 m^3/h
		Medium	580 m^3/h	580 m^3/h	630 m^3/h
		Low	540 m^3/h	540 m^3/h	580 m^3/h
		Quiet	360 m^3/h	380 m^3/h	400 m^3/h
NOISE LEVEL	Cooling	High	36 dB(A)	36 dB(A)	38 dB(A)
		Medium	33 dB(A)	33 dB(A)	35 dB(A)
		Low	29 dB(A)	29 dB(A)	31 dB(A)
		Quiet	23 dB(A)	23 dB(A)	23 dB(A)
	Heating	High	36 dB(A)	36 dB(A)	38 dB(A)
		Medium	33 dB(A)	33 dB(A)	35 dB(A)
		Low	32 dB(A)	32 dB(A)	33 dB(A)
		Quiet	22 dB(A)	23 dB(A)	24 dB(A)

MEASUREMENTS

DIMENSIONS	H x W x D	293 x 790 x 225 mm
WEIGHT	Net / Shipping	9.5 kg / 12.0 kg

INDOOR UNIT
COMPACT WALL MOUNTED

ELECTRICAL DATA

MODEL NAME	ASTG09LUCA	ASTG14LUCA
CAPACITY	2.5 kW class	4.0 kW class

FAN MOTOR

DISCRIMINATION			MFE-60TVT	
FAN SPEED	Cooling	High	1,030 r.p.m.	1,180 r.p.m.
		Medium	950 r.p.m.	1,080 r.p.m.
		Low	850 r.p.m.	980 r.p.m.
		Quiet	650 r.p.m.	740 r.p.m.
	Heating	High	1,030 r.p.m.	1,180 r.p.m.
		Medium	950 r.p.m.	1,080 r.p.m.
		Low	850 r.p.m.	1,010 r.p.m.
		Quiet	650 r.p.m.	790 r.p.m.
AIR FLOW	Cooling	High	600 m^3/h	710 m^3/h
		Medium	550 m^3/h	640 m^3/h
		Low	470 m^3/h	570 m^3/h
		Quiet	330 m^3/h	390 m^3/h
	Heating	High	600 m^3/h	710 m^3/h
		Medium	550 m^3/h	640 m^3/h
		Low	470 m^3/h	590 m^3/h
		Quiet	330 m^3/h	430 m^3/h
NOISE LEVEL	Cooling	High	36 dB(A)	41 dB(A)
		Medium	32 dB(A)	36 dB(A)
		Low	28 dB(A)	33 dB(A)
		Quiet	21 dB(A)	25 dB(A)
	Heating	High	36 dB(A)	41 dB(A)
		Medium	32 dB(A)	36 dB(A)
		Low	28 dB(A)	34 dB(A)
		Quiet	21 dB(A)	27 dB(A)

MEASUREMENTS

DIMENSIONS	H x W x D	282 x 870 x 185 mm
WEIGHT	Net / Shipping	9.5 kg / 12.0 kg

INDOOR UNIT
WALL MOUNTED

ELECTRICAL DATA

MODEL NAME	ASTG18LFCA	ASTG24LFCA ASTG24LFCB
CAPACITY	5.0 kW class	7.0 kW class

FAN MOTOR

DISCRIMINATION			MFD-50RON	
FAN SPEED	Cooling	High	1,220 r.p.m.	1,480 r.p.m.
		Medium	1,020 r.p.m.	1,220 r.p.m.
		Low	900 r.p.m.	1,020 r.p.m.
		Quiet	710 r.p.m.	900 r.p.m.
	Heating	High	1,220 r.p.m.	1,430 r.p.m.
		Medium	1,020 r.p.m.	1,220 r.p.m.
		Low	900 r.p.m.	1,020 r.p.m.
		Quiet	710 r.p.m.	900 r.p.m.
AIR FLOW	Cooling	High	900 m^3/h	1,120 m^3/h
		Medium	740 m^3/h	900 m^3/h
		Low	620 m^3/h	740 m^3/h
		Quiet	550 m^3/h	620 m^3/h
	Heating	High	900 m^3/h	1100 m^3/h
		Medium	740 m^3/h	900 m^3/h
		Low	620 m^3/h	740 m^3/h
		Quiet	550 m^3/h	620 m^3/h
NOISE LEVEL	Cooling	High	43 dB(A)	49 dB(A)
		Medium	37 dB(A)	42 dB(A)
		Low	33 dB(A)	37 dB(A)
		Quiet	26 dB(A)	33 dB(A)
	Heating	High	42 dB(A)	48 dB(A)
		Medium	37 dB(A)	42 dB(A)
		Low	33 dB(A)	37 dB(A)
		Quiet	25 dB(A)	33 dB(A)

MEASUREMENTS

DIMENSIONS	H x W x D	320 x 998 x 238 mm
WEIGHT	Net / Shipping	14 kg / 18 kg

INDOOR UNIT
COMPACT CASSETTE

ELECTRICAL DATA

MODEL NAME	AUTG09LVLA	AUTG12LVLA	AUTG18LVLA
CAPACITY	2.5 kW class	3.5 kW class	5.0 kW class

FAN MOTOR

DISCRIMINATION			MFF-24RVL		
FAN SPEED	Cooling	High	590 r.p.m.	660 r.p.m.	790 r.p.m.
		Medium	540 r.p.m.	580 r.p.m.	660 r.p.m.
		Low	490 r.p.m.	520 r.p.m.	570 r.p.m.
		Quiet	440 r.p.m.	460 r.p.m.	460 r.p.m.
	Heating	High	590 r.p.m.	650 r.p.m.	840 r.p.m.
		Medium	540 r.p.m.	580 r.p.m.	750 r.p.m.
		Low	490 r.p.m.	520 r.p.m.	650 r.p.m.
		Quiet	440 r.p.m.	460 r.p.m.	500 r.p.m.
AIR FLOW	Cooling	High	540 m^3/h	610 m^3/h	750 m^3/h
		Medium	490 m^3/h	530 m^3/h	610 m^3/h
		Low	440 m^3/h	470 m^3/h	520 m^3/h
		Quiet	390 m^3/h	410 m^3/h	410 m^3/h
	Heating	High	540 m^3/h	610 m^3/h	800 m^3/h
		Medium	490 m^3/h	530 m^3/h	710 m^3/h
		Low	440 m^3/h	470 m^3/h	600 m^3/h
		Quiet	390 m^3/h	410 m^3/h	450 m^3/h
NOISE LEVEL	Cooling	High	33 dB(A)	37 dB(A)	42 dB(A)
		Medium	31 dB(A)	33 dB(A)	37 dB(A)
		Low	29 dB(A)	31 dB(A)	33 dB(A)
		Quiet	27 dB(A)	28 dB(A)	29 dB(A)
	Heating	High	34 dB(A)	37 dB(A)	44 dB(A)
		Medium	32 dB(A)	33 dB(A)	40 dB(A)
		Low	29 dB(A)	31 dB(A)	37 dB(A)
		Quiet	27 dB(A)	28 dB(A)	30 dB(A)

MEASUREMENTS

DIMENSIONS	H x W x D	245 x 570 x 570 mm
WEIGHT	Net / Shipping	15 kg / 18 kg

PANEL

MEASUREMENTS

MODEL NAME		UTG-UFYD-W
DIMENSIONS	H x W x D	49 x 700 x 700 mm
WEIGHT	Net / Shipping	2.6 kg / 4.5 kg

INDOOR UNIT
SLIM DUCT

ELECTRICAL DATA

MODEL NAME	ARTG09LLTA	ARTG12LLTA	ARTG18LLTA
CAPACITY	2.5 kW class	3.5 kW class	5.0 kW class

FAN MOTOR

DISCRIMINATION			MFG-14WV		MFG-24WV
FAN SPEED	Cooling	High	1,260 r.p.m.	1,340 r.p.m.	1,380 r.p.m.
		Medium	1,160 r.p.m.	1,240 r.p.m.	1,300 r.p.m.
		Low	1,060 r.p.m.	1,140 r.p.m.	1,220 r.p.m.
		Quiet	960 r.p.m.	1,030 r.p.m.	1,140 r.p.m.
	Heating	High	1,260 r.p.m.	1,340 r.p.m.	1,380 r.p.m.
		Medium	1,160 r.p.m.	1,240 r.p.m.	1,300 r.p.m.
		Low	1,060 r.p.m.	1,140 r.p.m.	1,220 r.p.m.
		Quiet	960 r.p.m.	1,030 r.p.m.	1,140 r.p.m.
AIR FLOW	Cooling	High	600 m^3/h	650 m^3/h	940 m^3/h
		Medium	550 m^3/h	600 m^3/h	880 m^3/h
		Low	500 m^3/h	550 m^3/h	820 m^3/h
		Quiet	450 m^3/h	480 m^3/h	750 m^3/h
	Heating	High	600 m^3/h	650 m^3/h	940 m^3/h
		Medium	550 m^3/h	600 m^3/h	880 m^3/h
		Low	500 m^3/h	550 m^3/h	820 m^3/h
		Quiet	450 m^3/h	480 m^3/h	750 m^3/h
NOISE LEVEL	Cooling	High	28 dB(A)	29 dB(A)	32 dB(A)
		Medium	27 dB(A)	28 dB(A)	31 dB(A)
		Low	26 dB(A)	27 dB(A)	30 dB(A)
		Quiet	25 dB(A)	26 dB(A)	29 dB(A)
	Heating	High	28 dB(A)	29 dB(A)	33 dB(A)
		Medium	26 dB(A)	28 dB(A)	32 dB(A)
		Low	25 dB(A)	27 dB(A)	31 dB(A)
		Quiet	24 dB(A)	24 dB(A)	29 dB(A)

MEASUREMENTS

DIMENSIONS	H x W x D	198 x 700 x 620 mm	198 x 900 x 620
WEIGHT	Net / Shipping	19 kg / 26 kg	23 kg / 30 kg

INDOOR UNIT
FLOOR / CEILING

ELECTRICAL DATA

MODEL NAME	ABTG18LVTA
CAPACITY	5.0 kW class

FAN MOTOR

DISCRIMINATION			MFH-24RVL
FAN SPEED	Cooling	High	1,040 r.p.m.
		Medium	950 r.p.m.
		Low	800 r.p.m.
		Quiet	740 r.p.m.
	Heating	High	1,040 r.p.m.
		Medium	950 r.p.m.
		Low	800 r.p.m.
		Quiet	740 r.p.m.
AIR FLOW	Cooling	High	780 m^3/h
		Medium	700 m^3/h
		Low	560 m^3/h
		Quiet	500 m^3/h
	Heating	High	780 m^3/h
		Medium	700 m^3/h
		Low	560 m^3/h
		Quiet	500 m^3/h
NOISE LEVEL	Cooling	High	41 dB(A)
		Medium	38 dB(A)
		Low	34 dB(A)
		Quiet	32 dB(A)
	Heating	High	41 dB(A)
		Medium	38 dB(A)
		Low	34 dB(A)
		Quiet	32 dB(A)

MEASUREMENTS

DIMENSIONS	H x W x D	199 x 990 x 655 mm
WEIGHT	Net / Shipping	28 kg / 37 kg

DIMENSIONS

OUTDOOR UNIT

Unit : mm

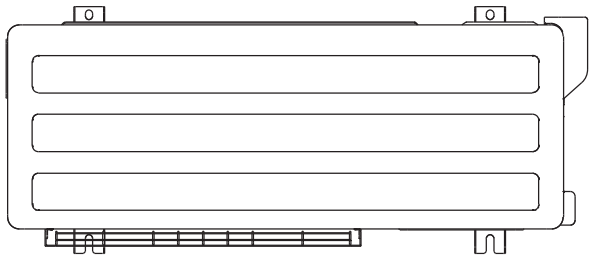

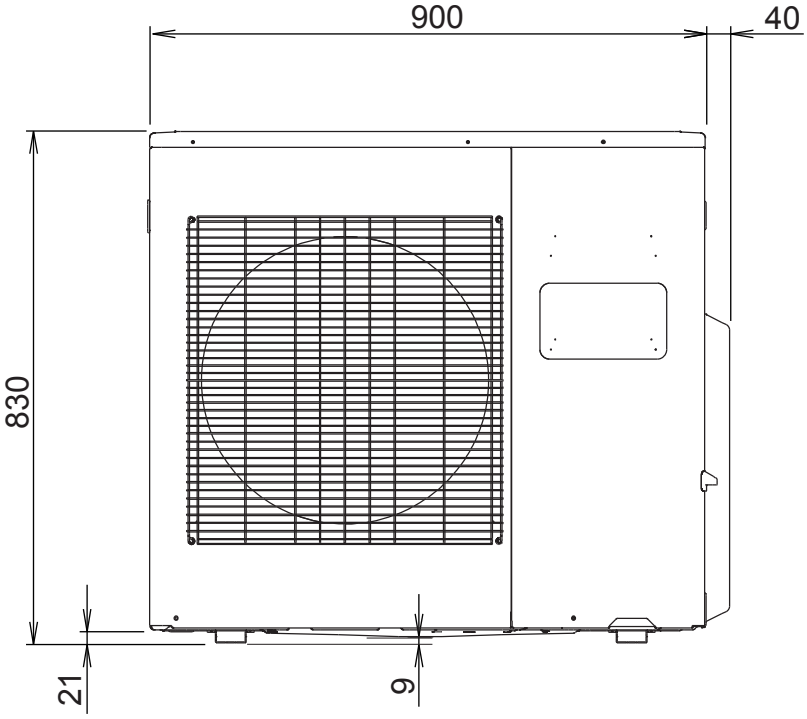

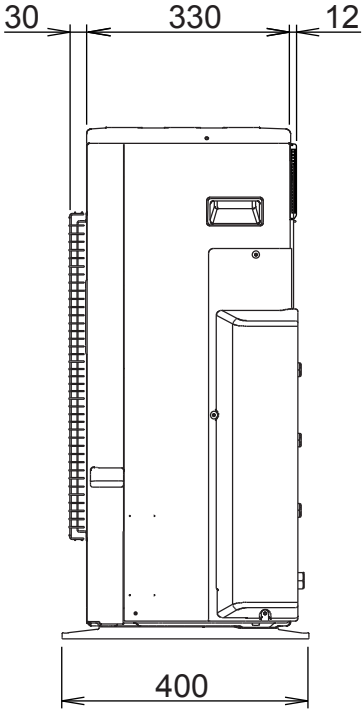

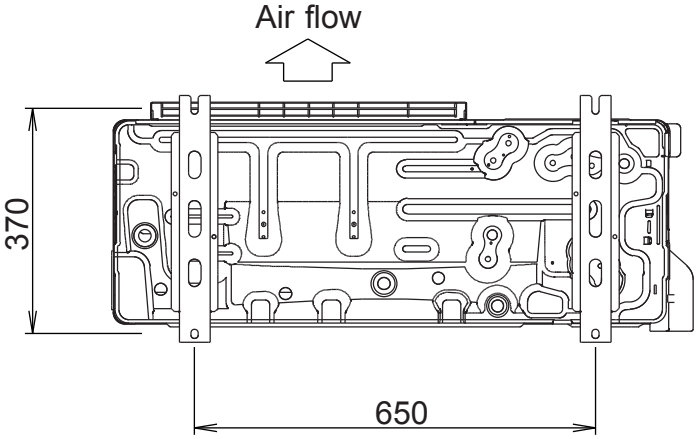

Unit : mm

INDOOR UNIT
COMPACT WALL MOUNTED
ASTG07LVCA
ASTG09LVCA
ASTG12LVCA
ASTG12LVCB

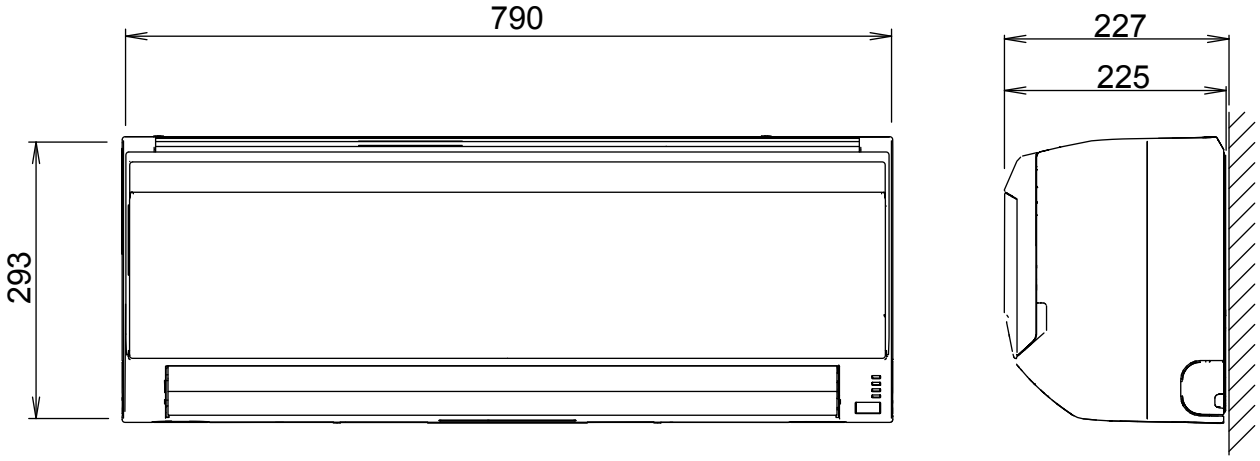

Drain hose length : 420 mm

INDOOR UNIT
COMPACT WALL MOUNTED
ASTG09LUCA
ASTG14LUCA

Drain hose length : 600 mm

INDOOR UNIT
WALL MOUNTED
ASTG18LFCA
ASTG24LFCA
ASTG24LFCB

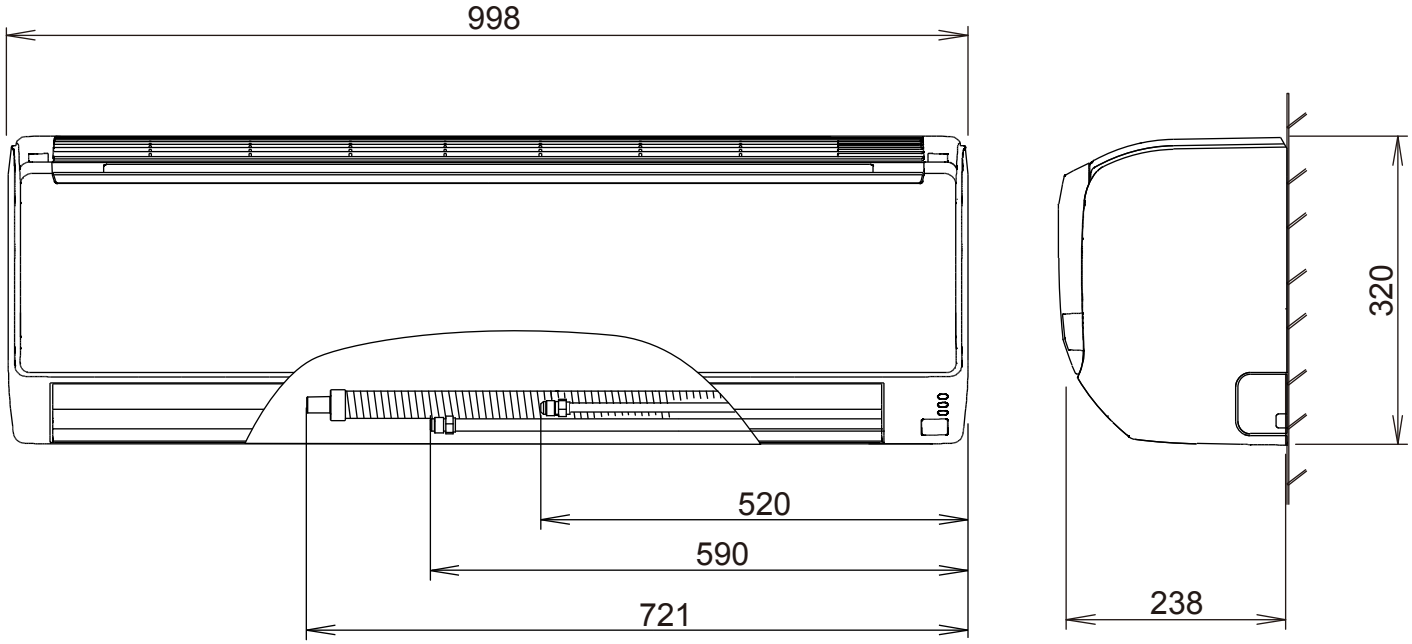

INDOOR UNIT
COMPACT CASSETTE
AUTG09LVLA
AUTG12LVLA
AUTG18LVLA
Unit : mm

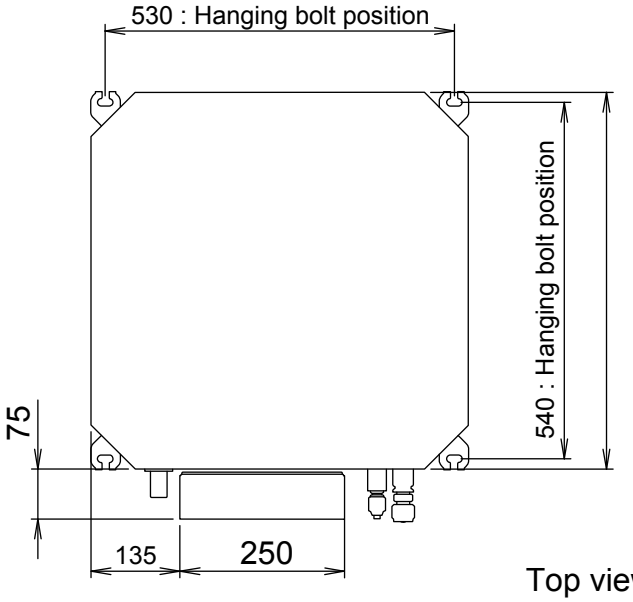

Top view

• Decoration panel mounting state

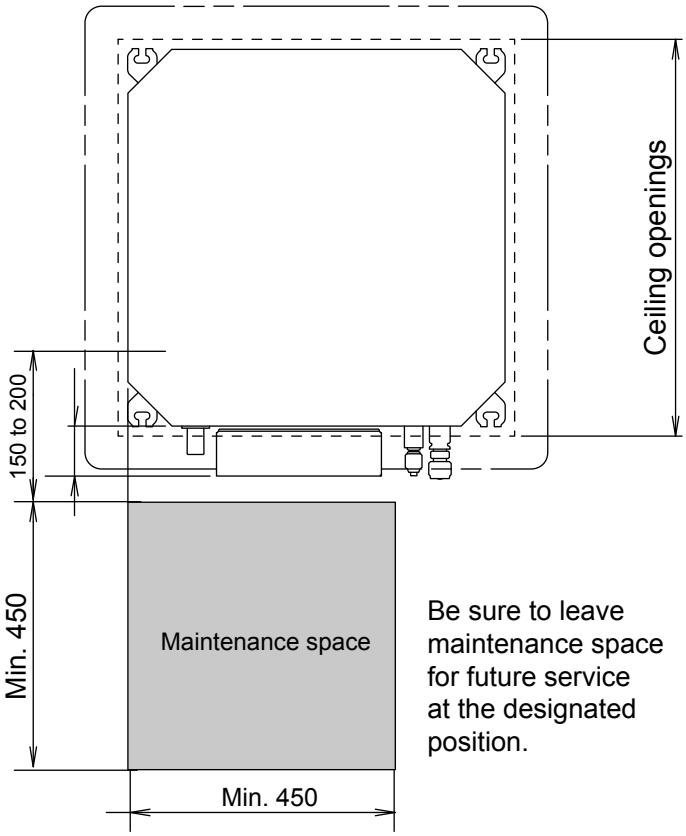

Be sure to leave maintenance space for future service at the designated position.

Drain hose length : 210 mm

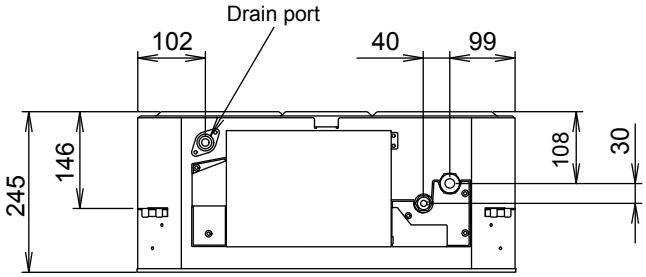

Side view

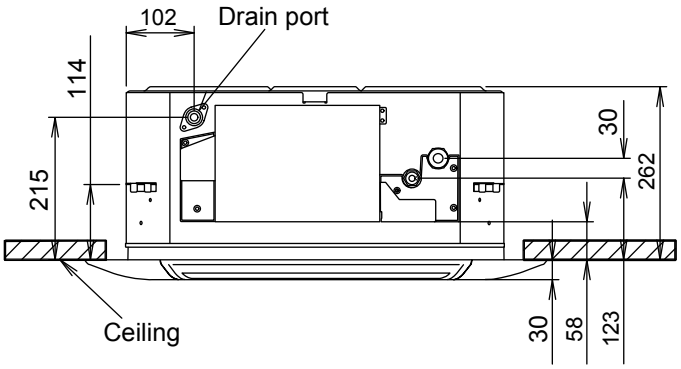

Bottom view

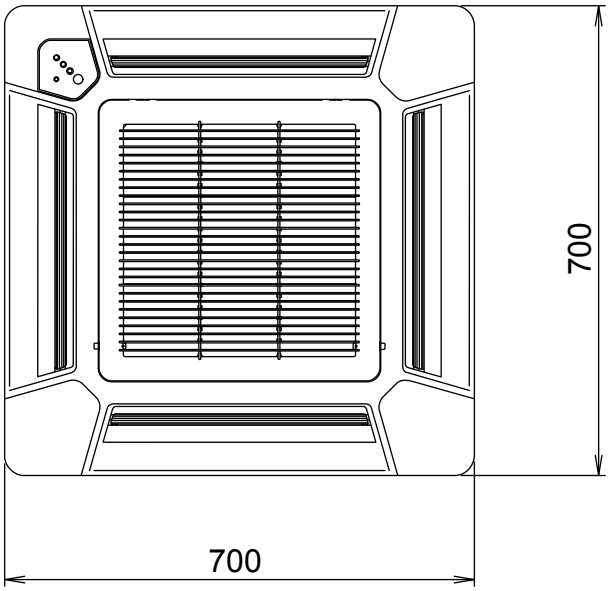

Side view

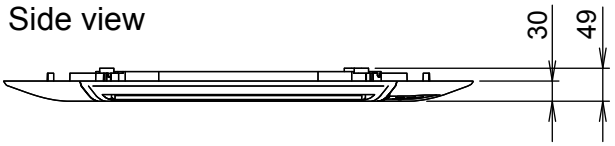

INDOOR UNIT
SLIM DUCT
ARTG09LLTA
ARTG12LLTA
(Serial number : T)
Unit : mm

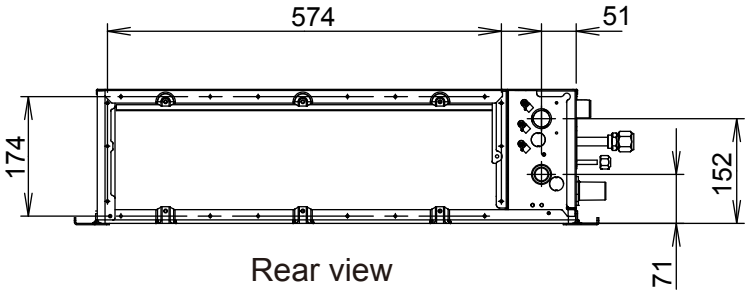

Rear view

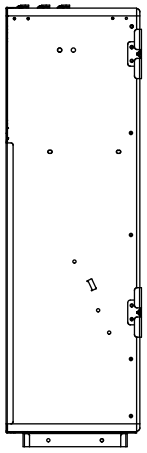

View A

Drain hose length : 210 mm

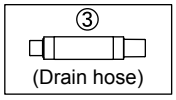

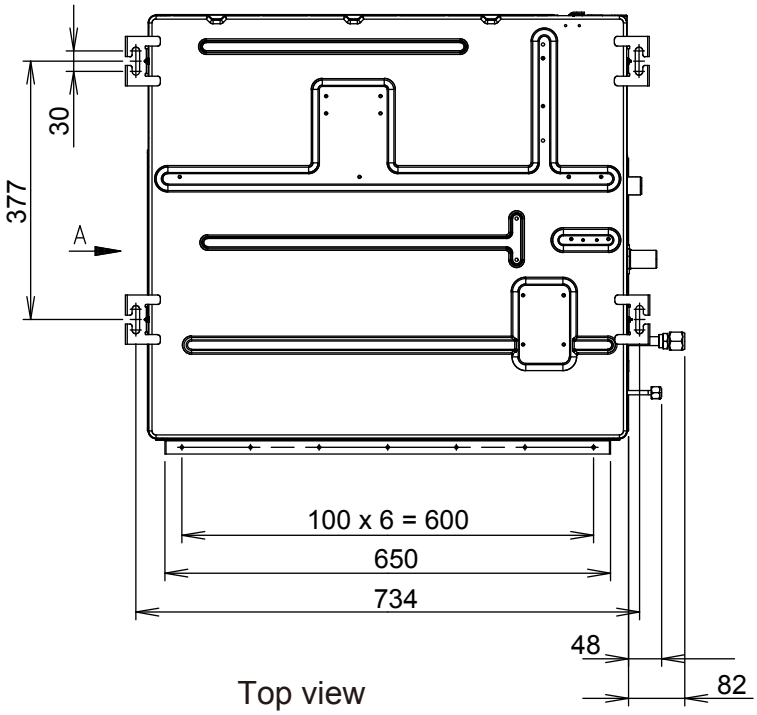

Top view

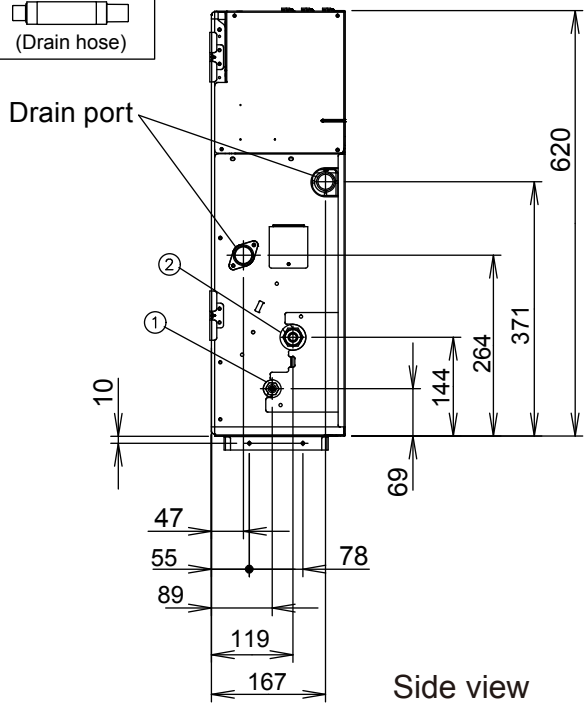

Side view

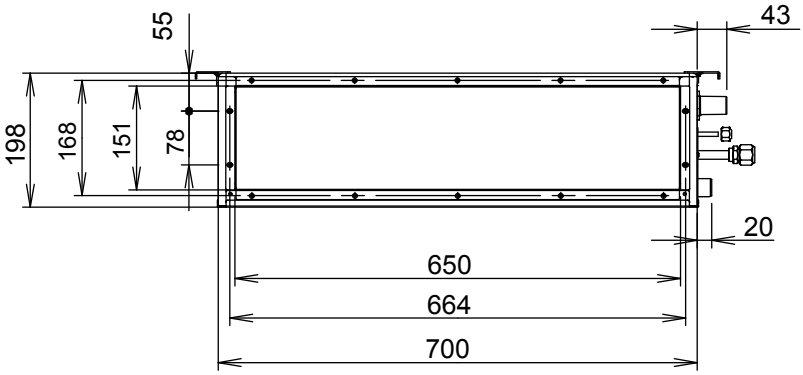

Front view

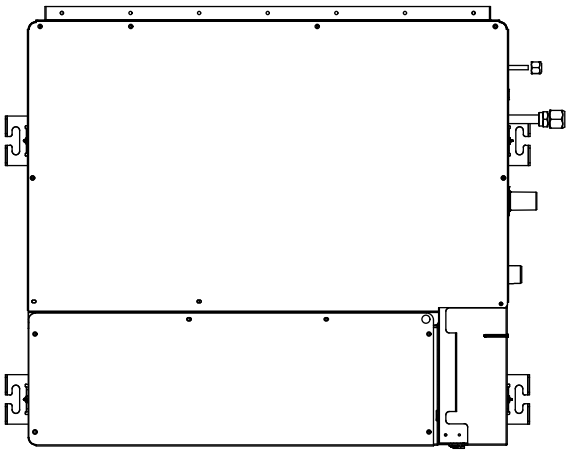

Bottom view

INDOOR UNIT
SLIM DUCT
ARTG18LLTA
(Serial number : T)

Unit : mm

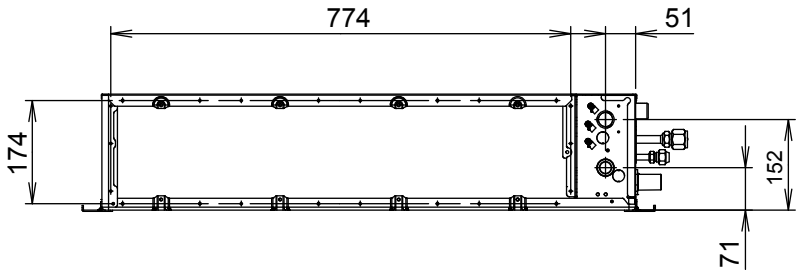

Rear view

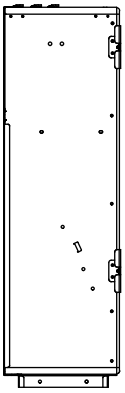

View A

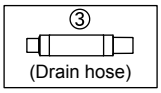

Drain hose length : 210 mm

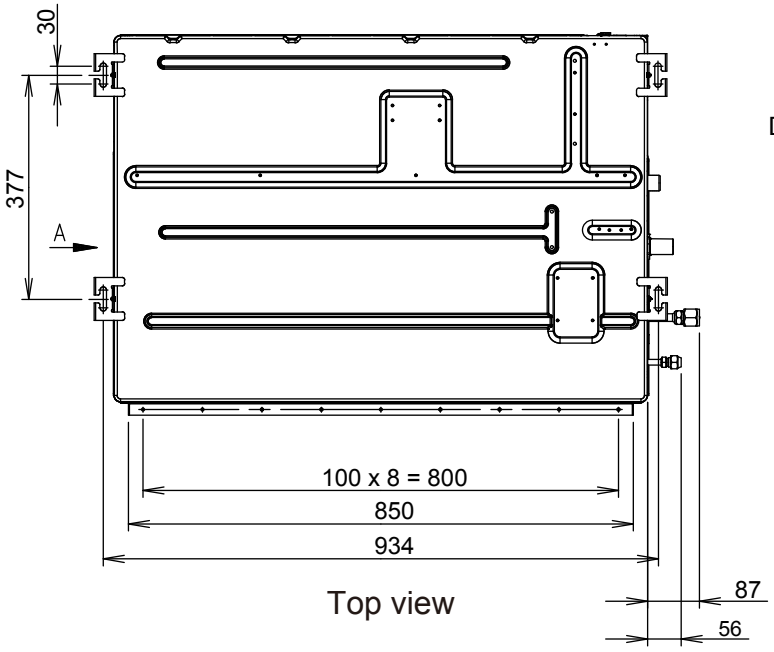

Top view

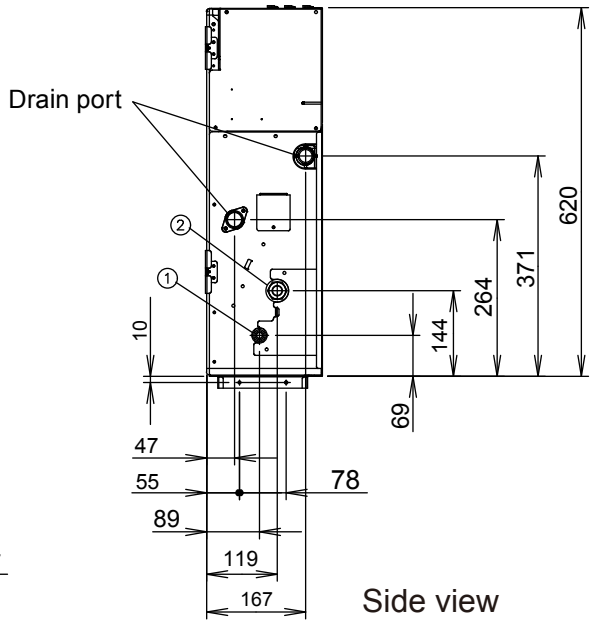

Side view

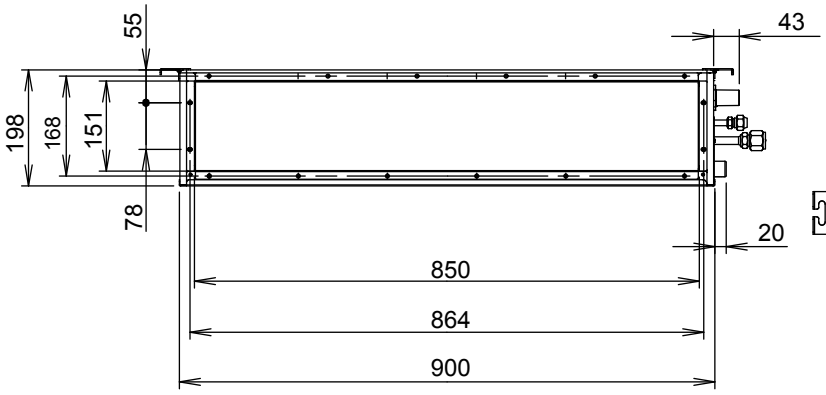

Front view

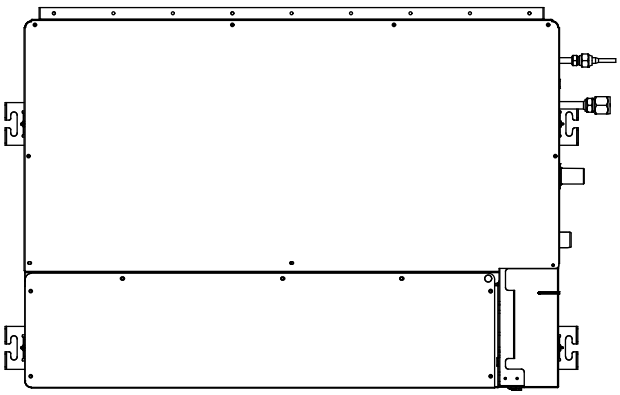

Bottom view

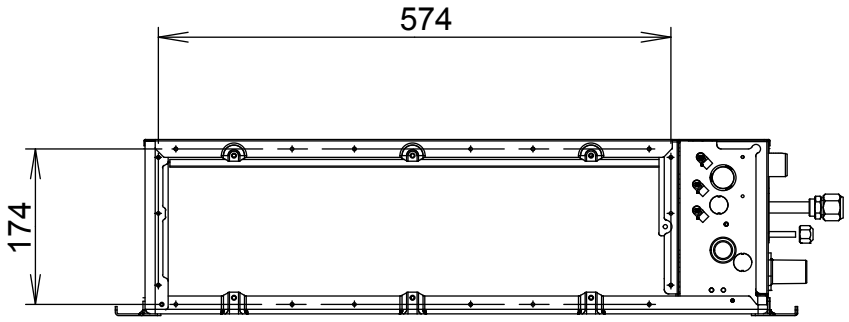

INDOOR UNIT
SLIM DUCT
ARTG09LLTA
ARTG12LLTA
(Serial number : R)

Unit : mm

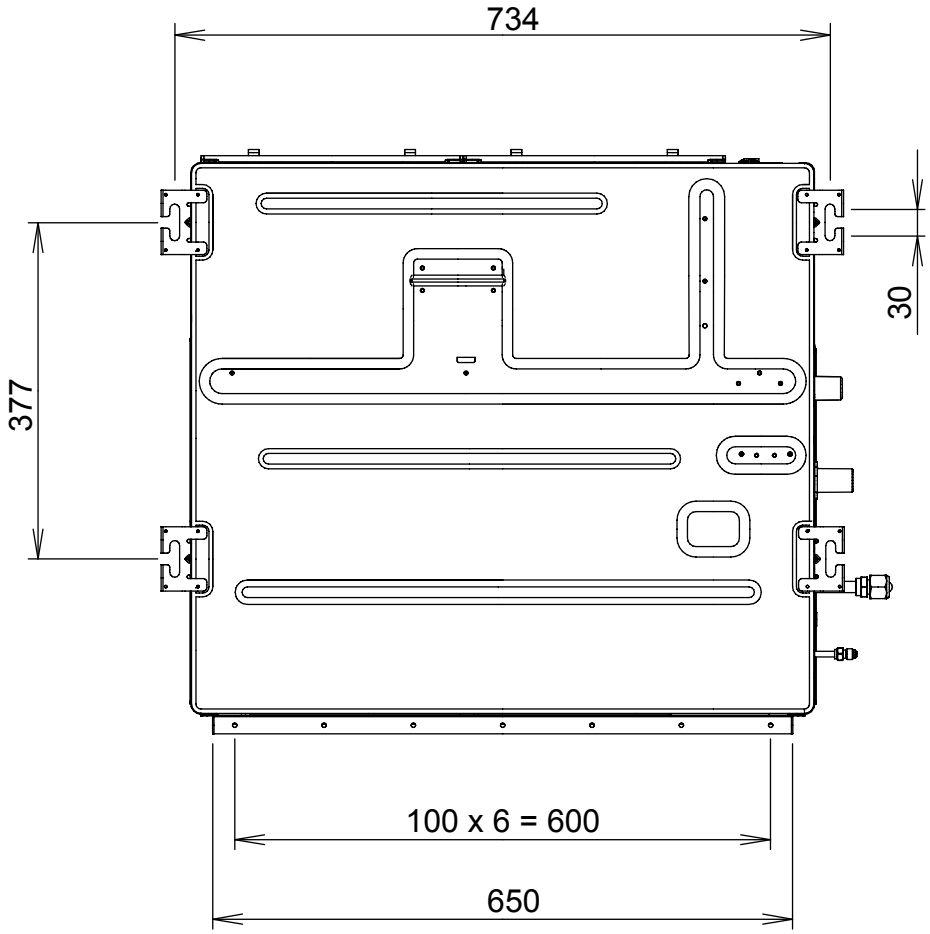

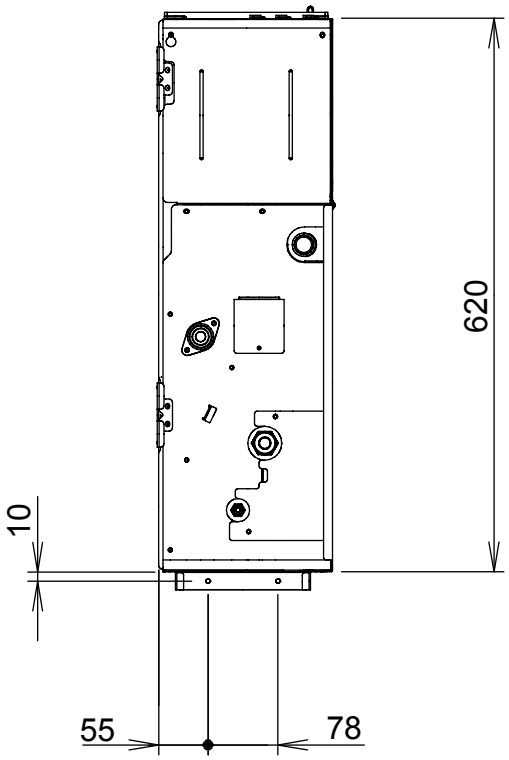

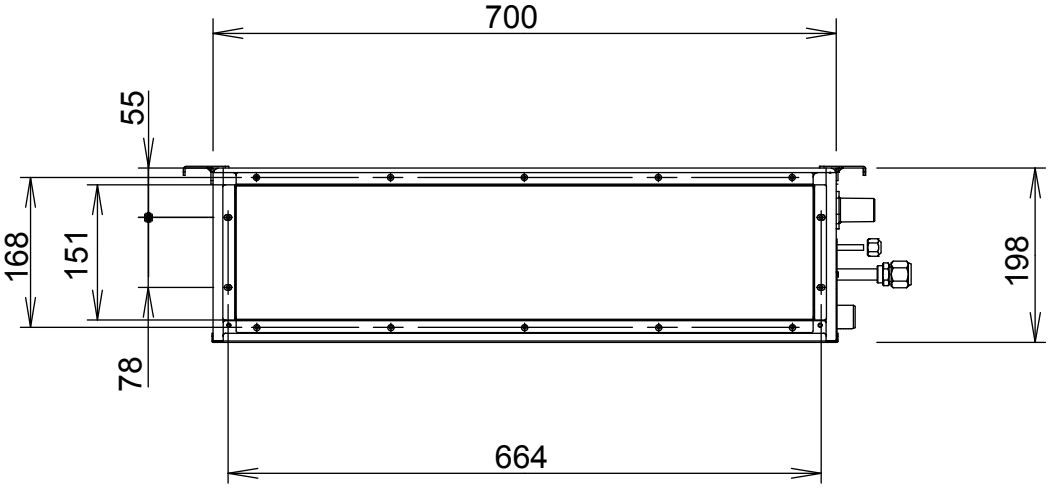

2012.02.28 add

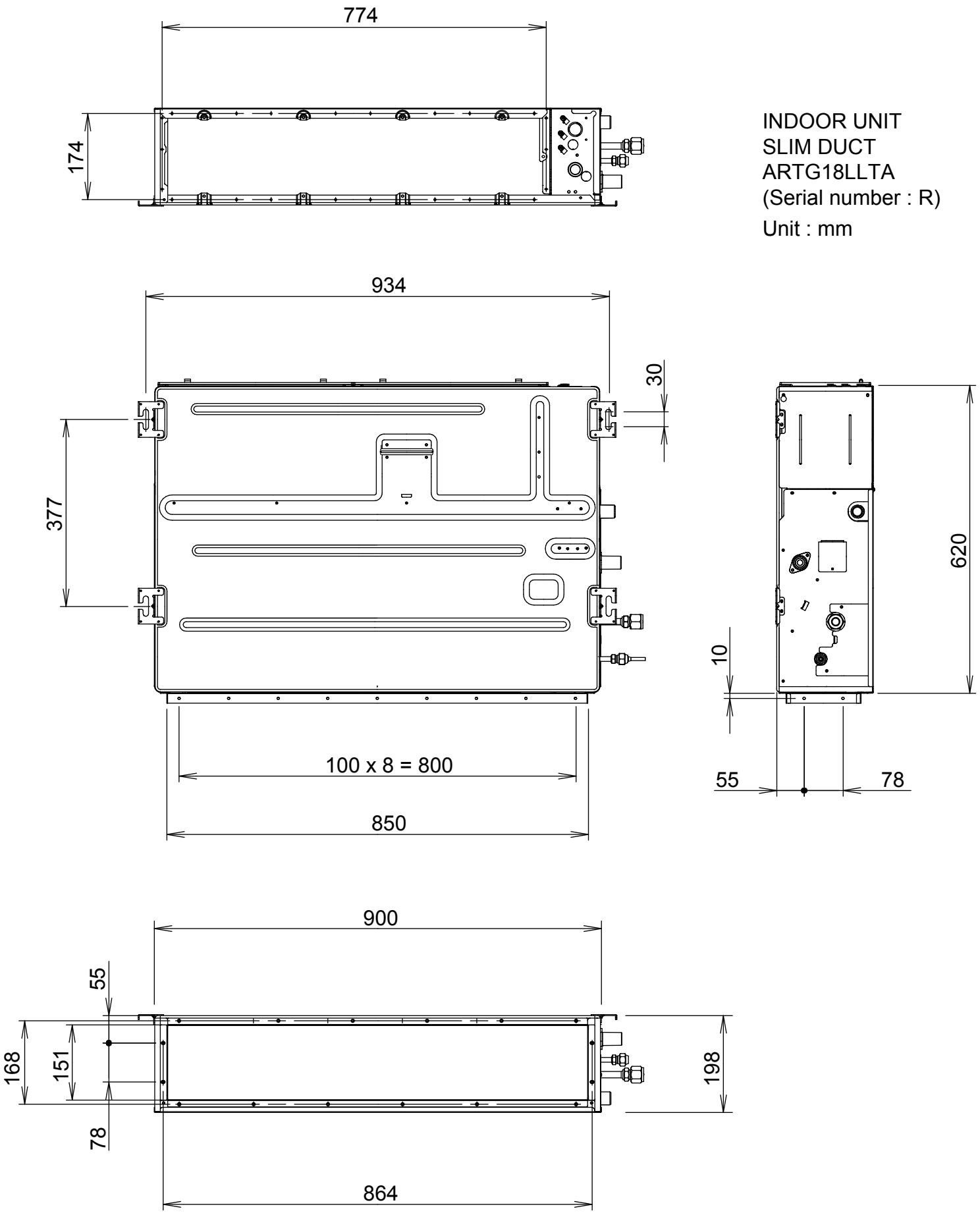

INDOOR UNIT
SLIM DUCT
ARTG18LLTA
(Serial number : R)
Unit : mm

2012.02.28 add

INDOOR UNIT
FLOOR / CEILING
ABTG18LVTA

Unit : mm

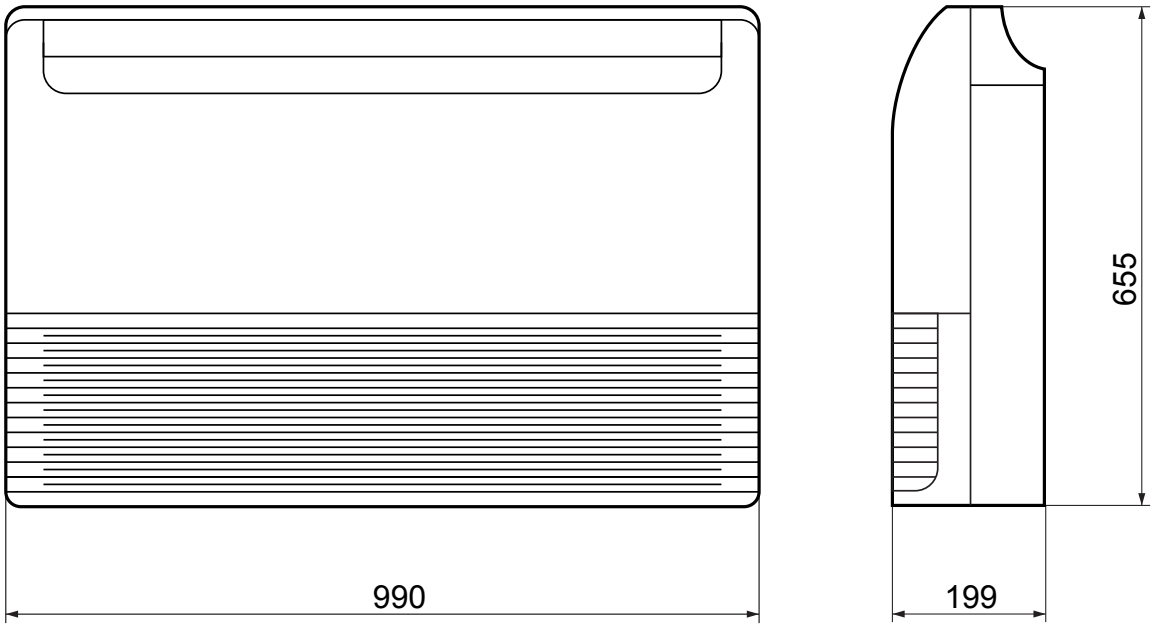

Rear view

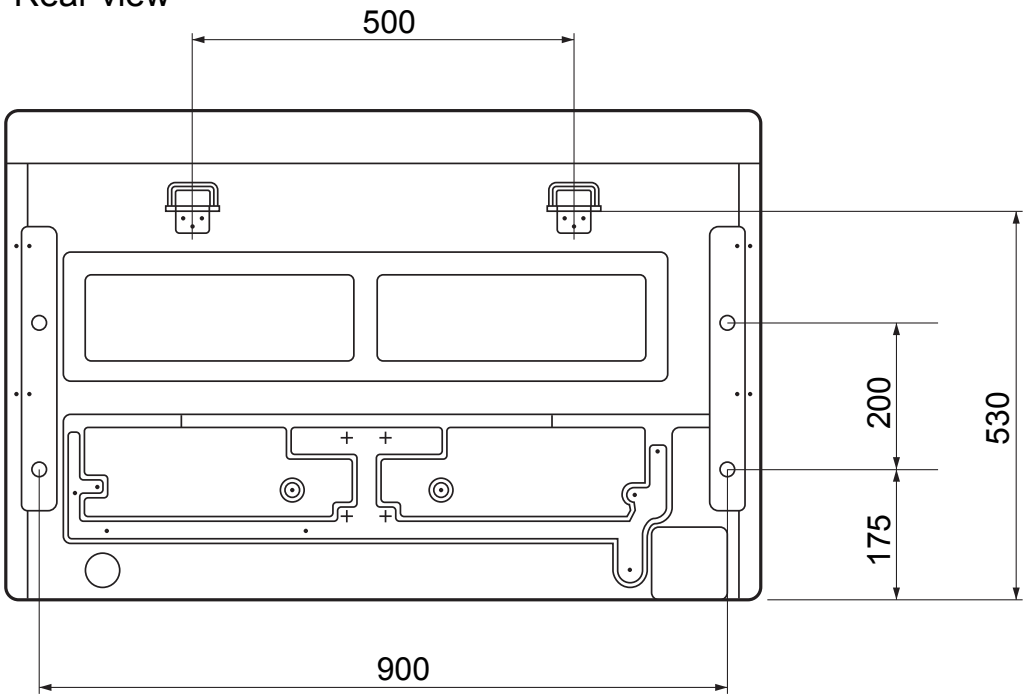

Drain hose length : 700 mm

REFRIGERANT SYSTEM DIAGRAM

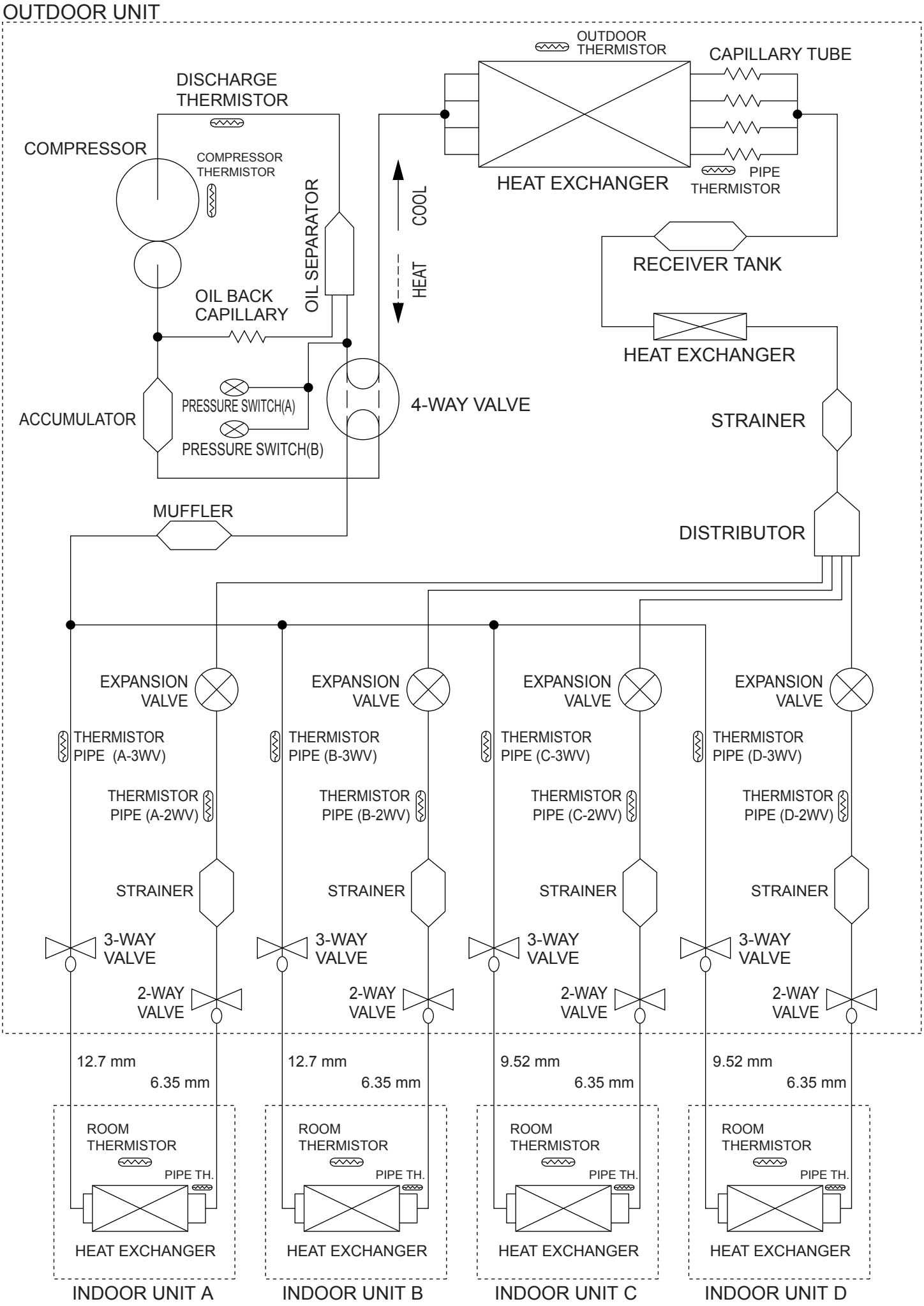

CIRCUIT DIAGRAM

OUTDOOR UNIT

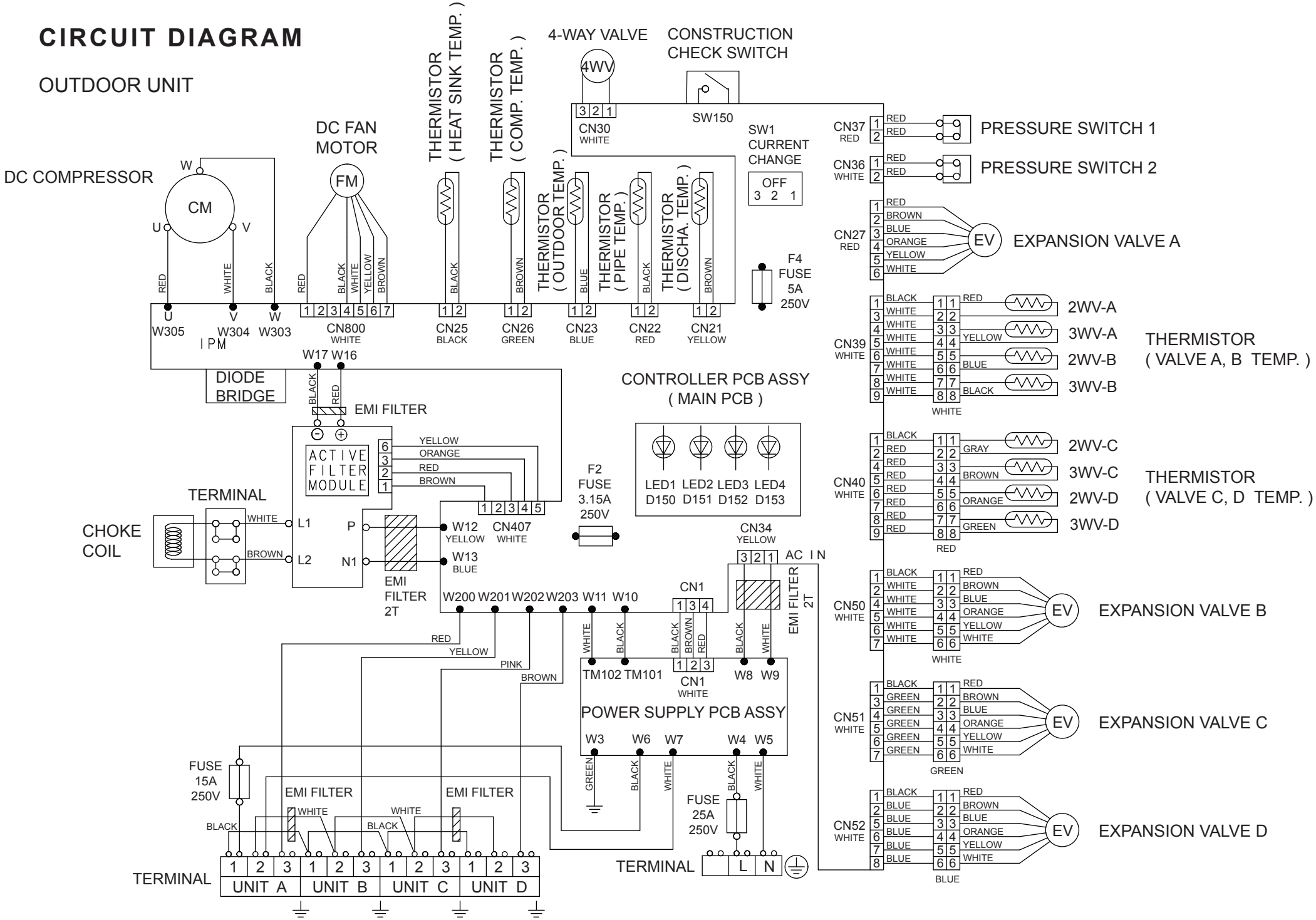

INDOOR UNIT
COMPACT WALL MOUNTED
ASTG07LVCA
ASTG09LVCA
ASTG12LVCA
ASTG12LVCB

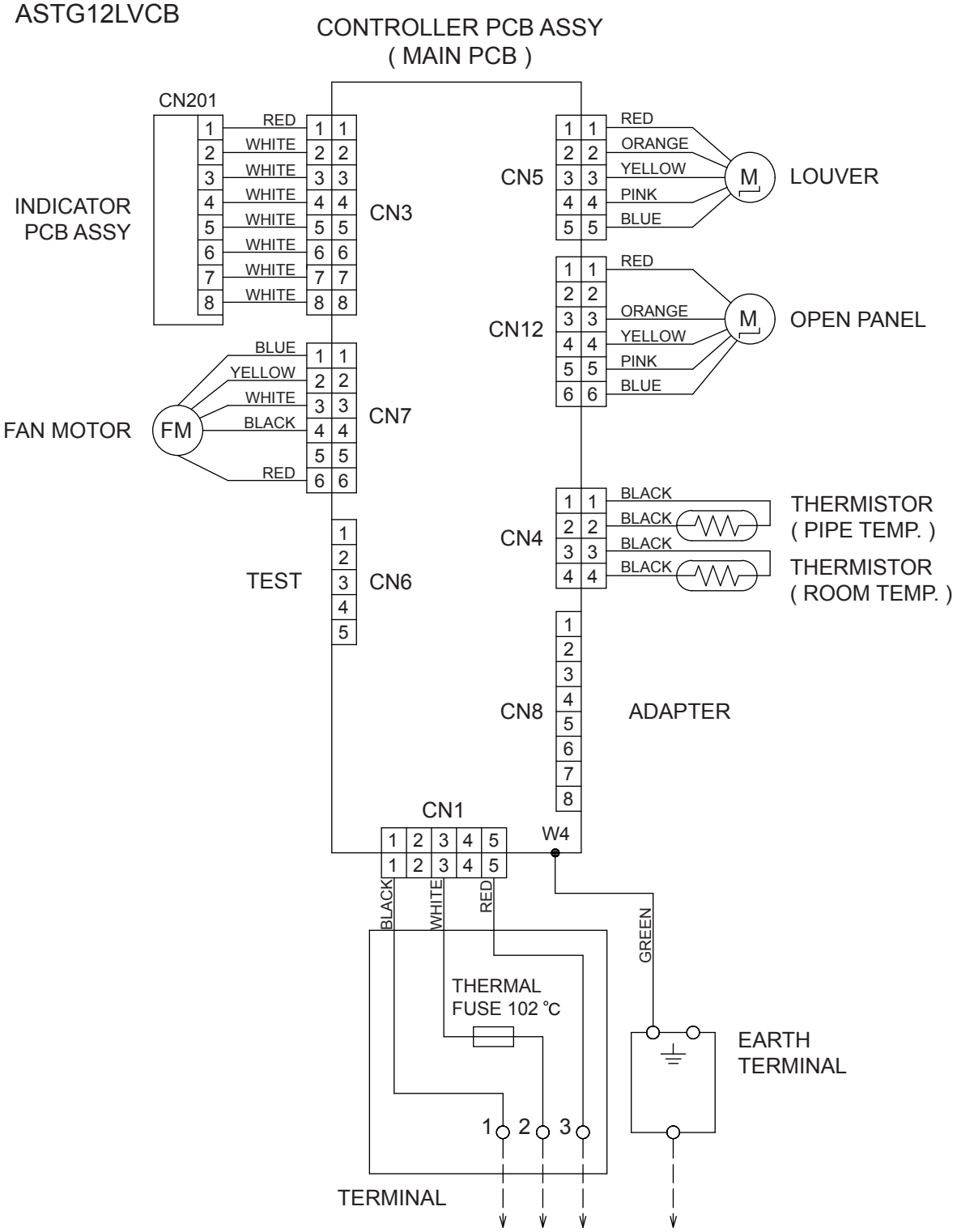

INDOOR UNIT
COMPACT WALL MOUNTED
ASTG09LUCA
ASTG14LUCA

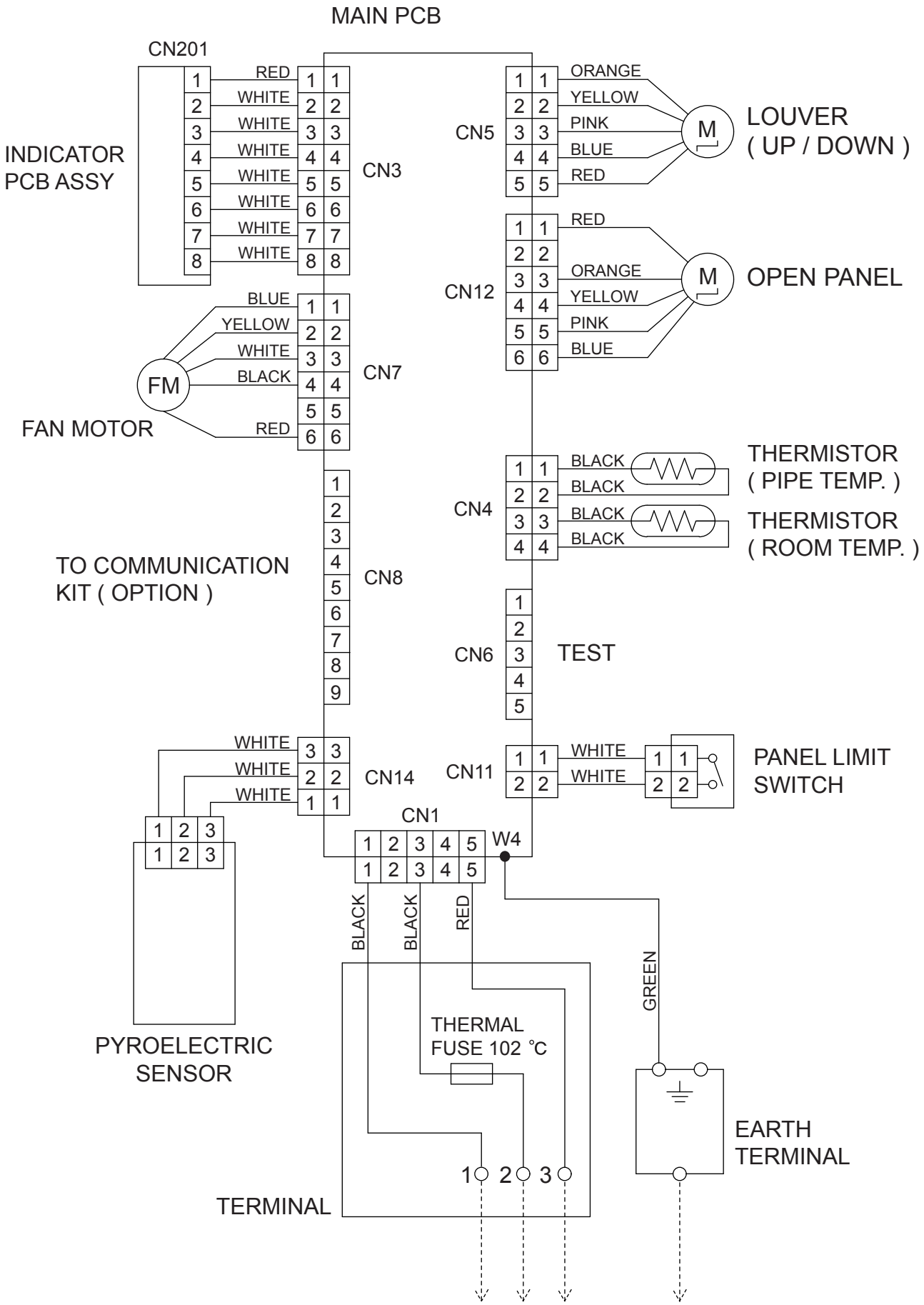

2012.02.28 add

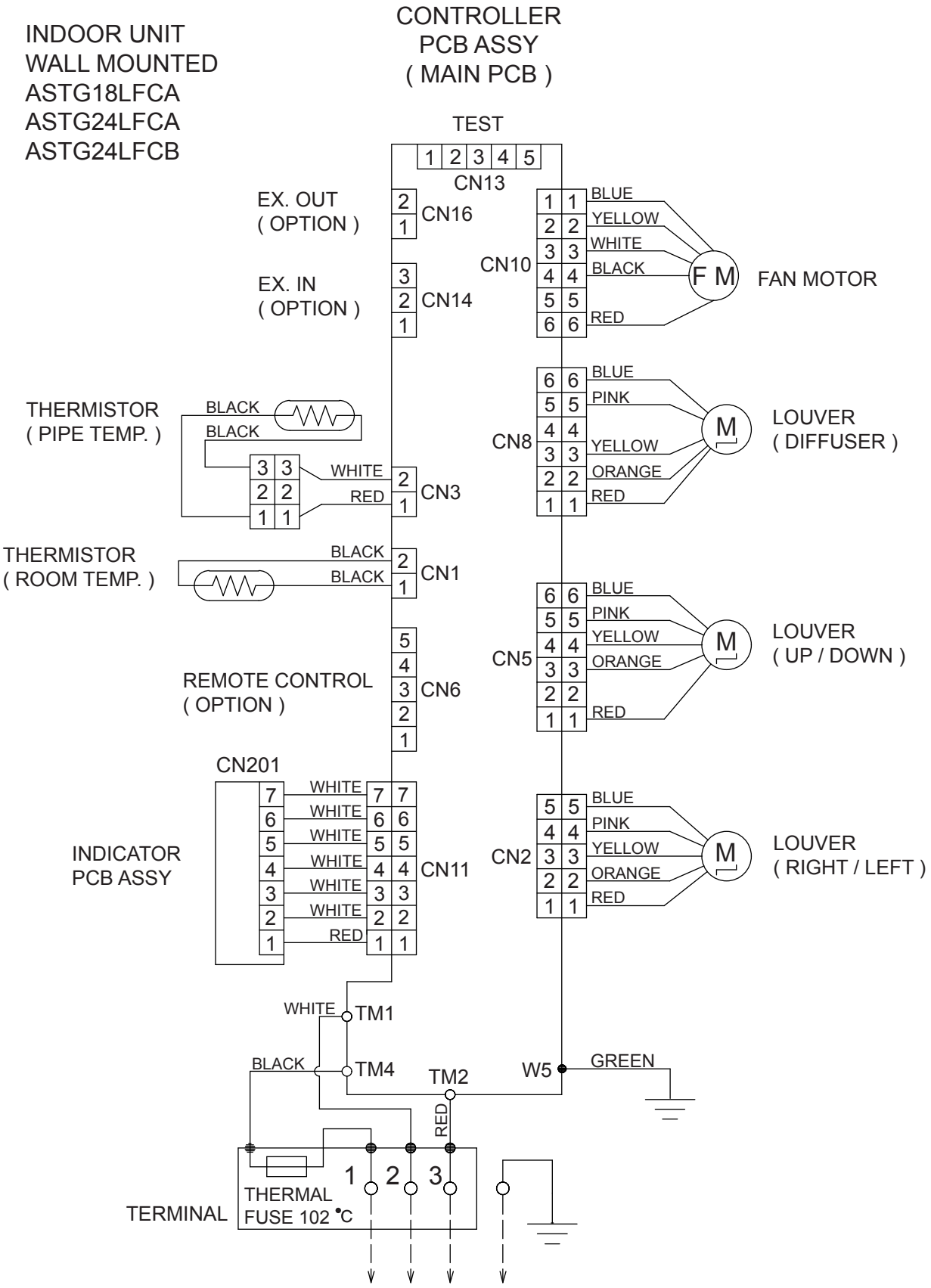
INDOOR UNIT
WALL MOUNTED
ASTG18LFCA
ASTG24LFCA
ASTG24LFCB
CONTROLLER
PCB ASSY
(MAIN PCB)
TEST
CN13
EX. OUT
(OPTION)
CN16
EX. IN
(OPTION)
CN14
CN10
BLUE
YELLOW
WHITE
BLACK
RED
F M
FAN MOTOR
THERMISTOR
(PIPE TEMP.)
BLACK
BLACK
WHITE
RED
CN3
CN8
BLUE
PINK
YELLOW
ORANGE
RED
M
LOUVER
(DIFFUSER)
THERMISTOR
(ROOM TEMP.)
BLACK
BLACK
CN1
REMOTE CONTROL
(OPTION)
CN6
CN5
BLUE
PINK
YELLOW
ORANGE
RED
M
LOUVER
(UP / DOWN)
CN201
INDICATOR
PCB ASSY
WHITE
WHITE
WHITE
WHITE
WHITE
WHITE
RED
CN11
CN2
BLUE
PINK
YELLOW
ORANGE
RED
M
LOUVER
(RIGHT / LEFT)
WHITE
TM1
BLACK
TM4
TM2
W5
GREEN
RED
1
2
3
THERMAL
FUSE 102 °C
TERMINAL

INDOOR UNIT
COMPACT CASSETTE
AUTG09LVLA
AUTG12LVLA
AUTG18LVLA

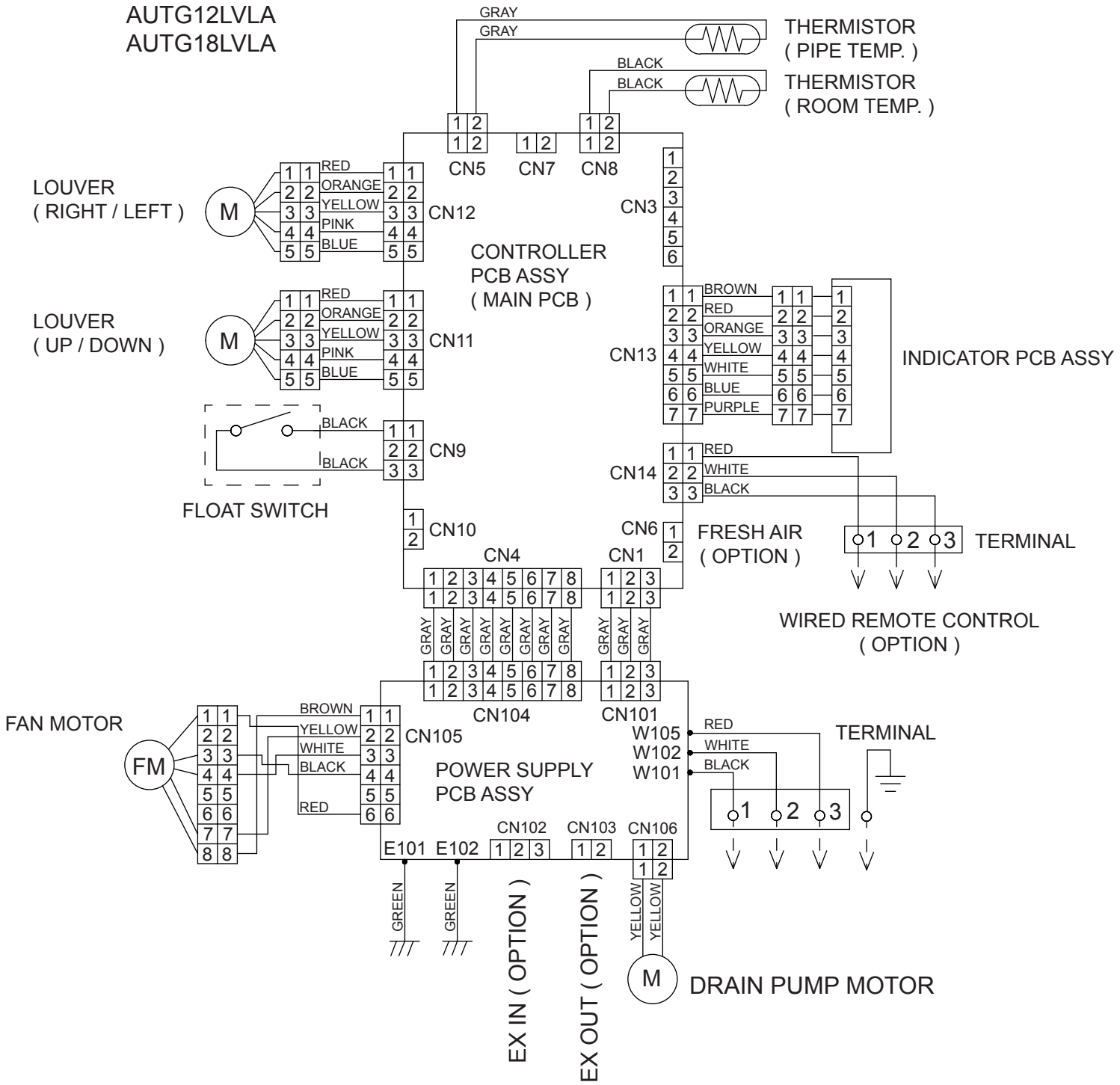

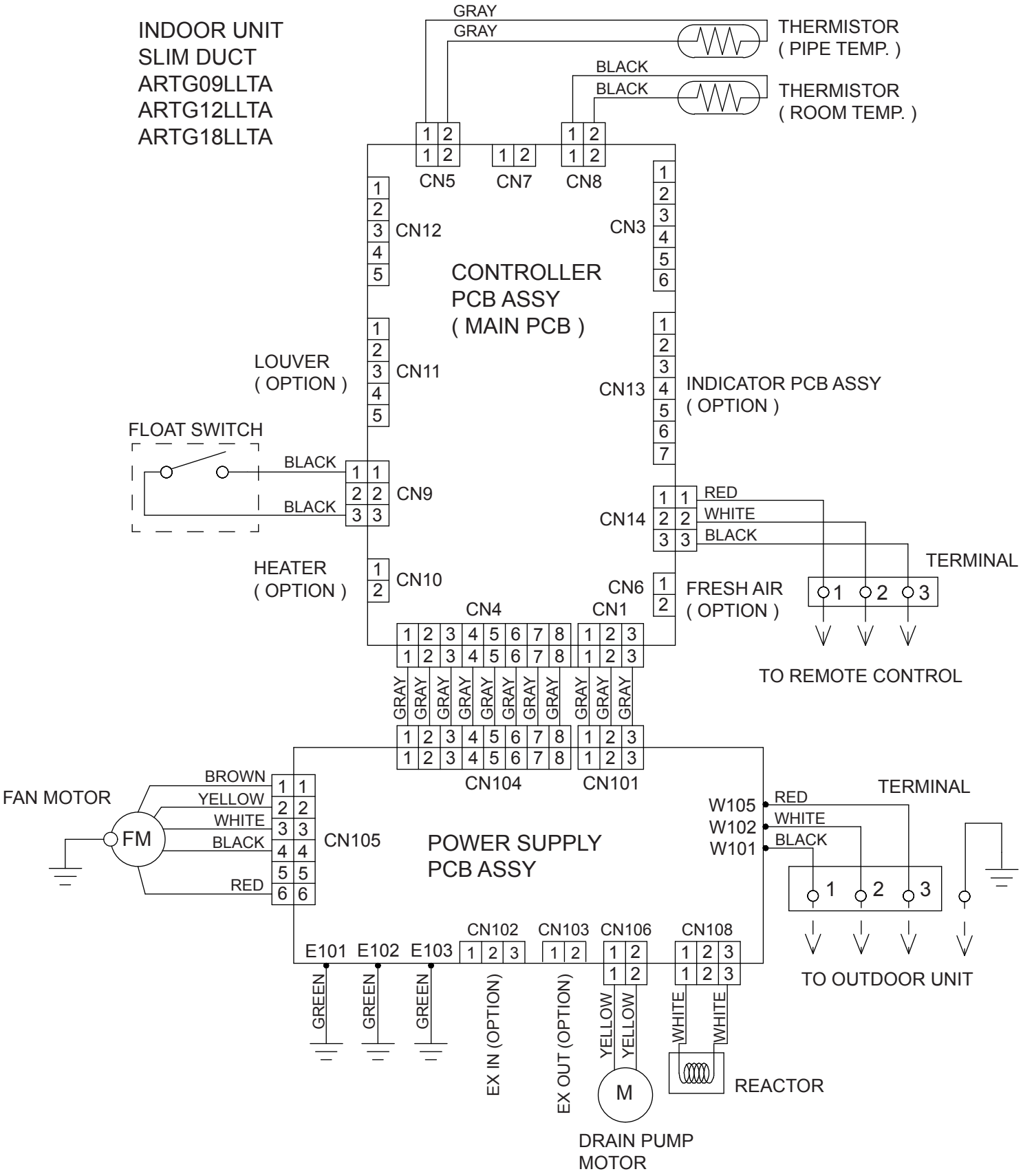
INDOOR UNIT
SLIM DUCT
ARTG09LLTA
ARTG12LLTA
ARTG18LLTA
GRAY
GRAY
THERMISTOR
(PIPE TEMP.)
BLACK
BLACK
THERMISTOR
(ROOM TEMP.)
CN5
CN7
CN8
CN12
CN3
CONTROLLER
PCB ASSY
(MAIN PCB)
CN11
LOUVER
(OPTION)
CN13
INDICATOR PCB ASSY
(OPTION)
FLOAT SWITCH
BLACK
BLACK
CN9
CN14
RED
WHITE
BLACK
TERMINAL
HEATER
(OPTION)
CN10
CN6
FRESH AIR
(OPTION)
CN4
CN1
TO REMOTE CONTROL
GRAY
CN104
CN101
FAN MOTOR
BROWN
YELLOW
WHITE
BLACK
RED
FM
CN105
POWER SUPPLY
PCB ASSY
W105
W102
W101
RED
WHITE
BLACK
TERMINAL
TO OUTDOOR UNIT
E101
E102
E103
CN102
CN103
CN106
CN108
GREEN
GREEN
GREEN
EX IN (OPTION)
EX OUT (OPTION)
YELLOW
YELLOW
WHITE
WHITE
M
REACTOR
DRAIN PUMP
MOTOR

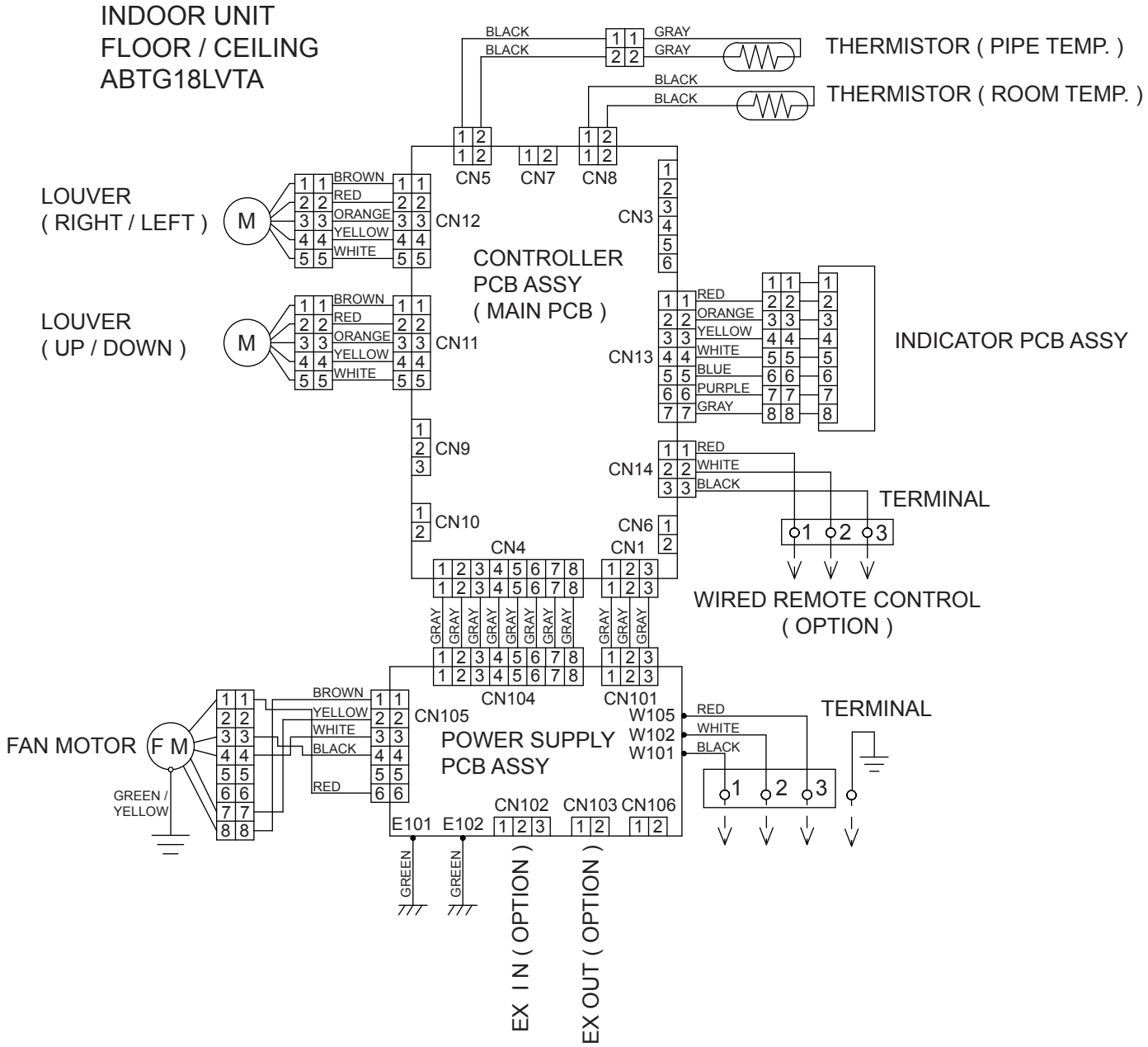
INDOOR UNIT
FLOOR / CEILING
ABTG18LVTA
THERMISTOR (PIPE TEMP.)
THERMISTOR (ROOM TEMP.)
BLACK
BLACK
GRAY
GRAY
CN5
CN7
CN8
LOUVER
(RIGHT / LEFT)
LOUVER
(UP / DOWN)
M
BROWN
RED
ORANGE
YELLOW
WHITE
CN12
CN11
CN3
CONTROLLER
PCB ASSY
(MAIN PCB)
CN13
RED
ORANGE
YELLOW
WHITE
BLUE
PURPLE
GRAY
INDICATOR PCB ASSY
CN9
CN10
CN14
RED
WHITE
BLACK
TERMINAL
CN6
CN4
CN1
WIRED REMOTE CONTROL
(OPTION)
GRAY
CN104
CN101
FAN MOTOR
F M
GREEN /
YELLOW
BROWN
YELLOW
WHITE
BLACK
RED
CN105
POWER SUPPLY
PCB ASSY
W105
W102
W101
RED
WHITE
BLACK
TERMINAL
CN102
CN103
CN106
E101
E102
GREEN
GREEN
EX I N (OPTION)
EX OUT (OPTION)

OUTDOOR PCB CIRCUIT DIAGRAM

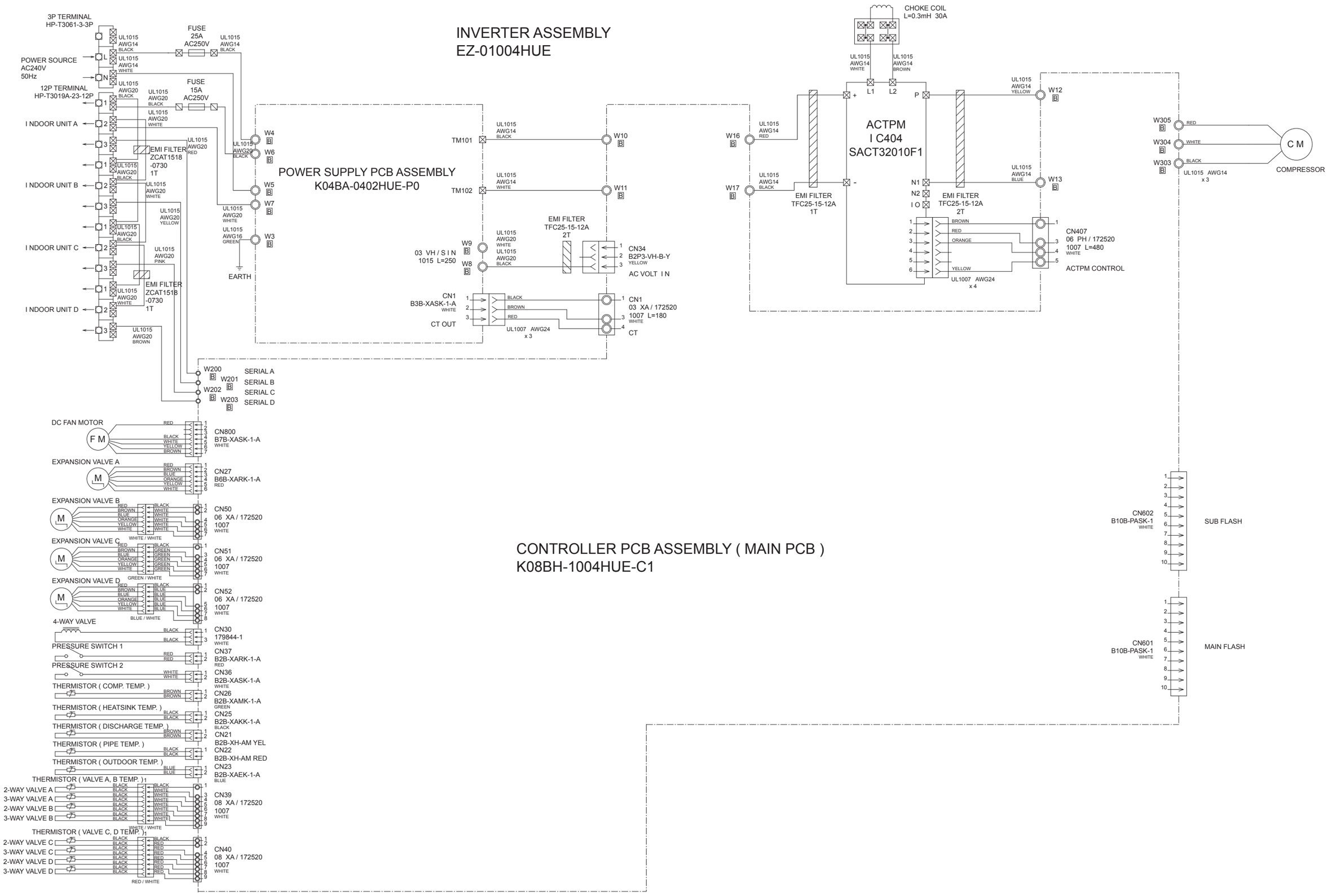

OUTDOOR UNIT
CONTROLLER PCB ASSEMBLY (MAIN PCB)
K08BH-1004HUE-C1

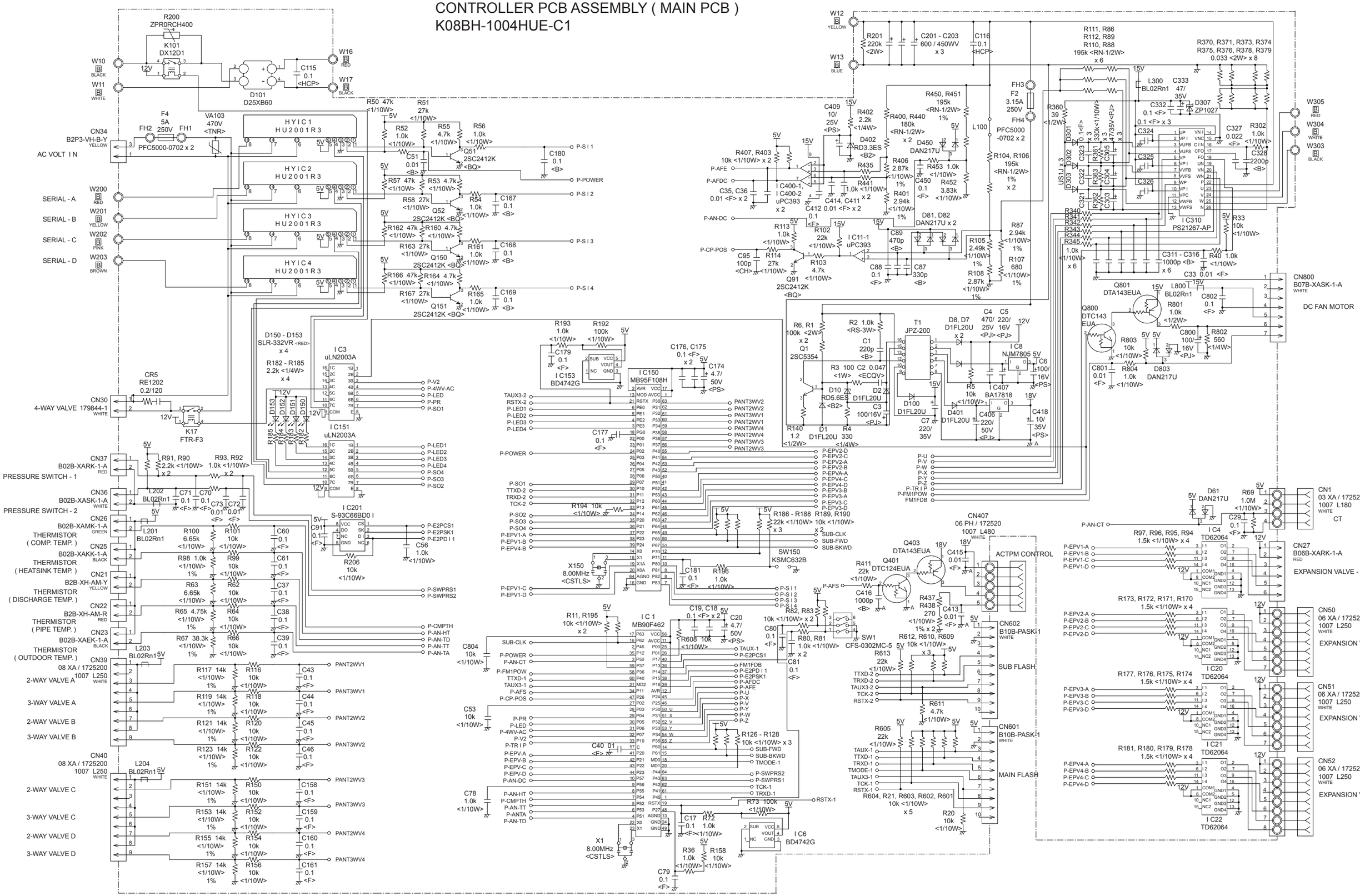

OUTDOOR UNIT
POWER SUPPLY PCB ASSEMBLY
K04BA-0402HUE-P0

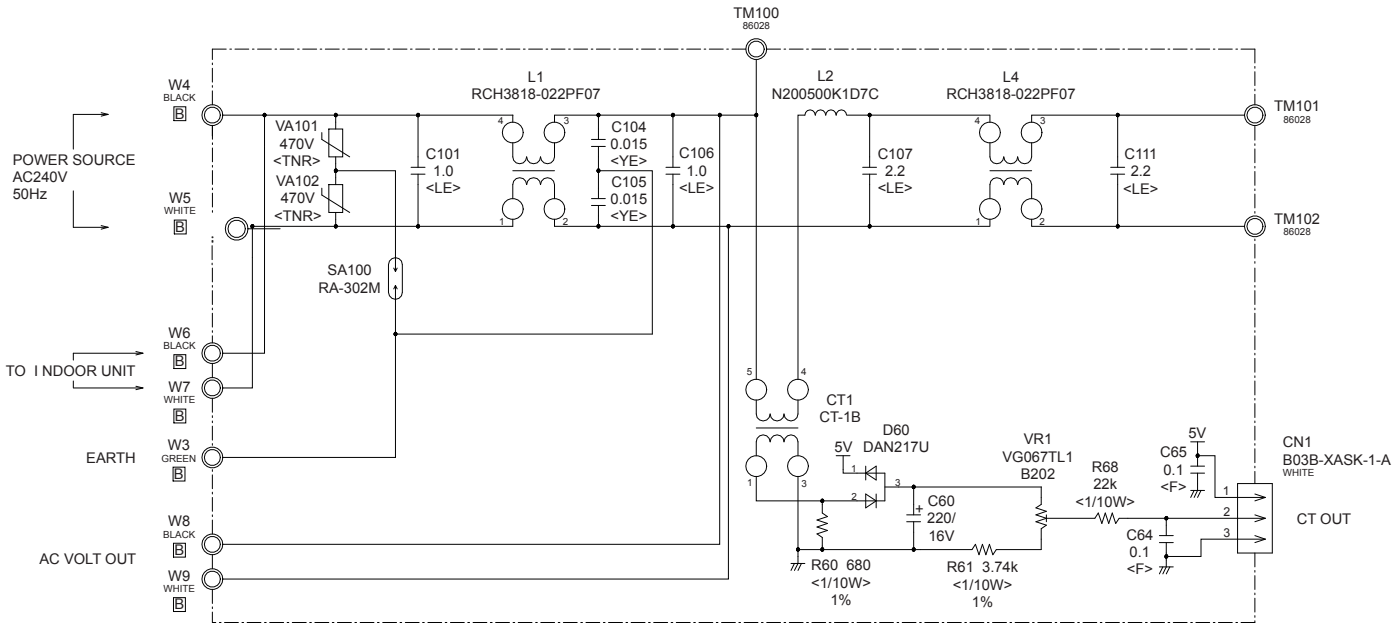

INDOOR PCB CIRCUIT DIAGRAM

COMPACT WALL MOUNTED
CONTROL UNIT
ASTG07LVCA : EZ-0100MHSE
ASTG09LVCA : EZ-010DHSE
ASTG12LVCA, ASTG12LVCB : EZ-010EHSE

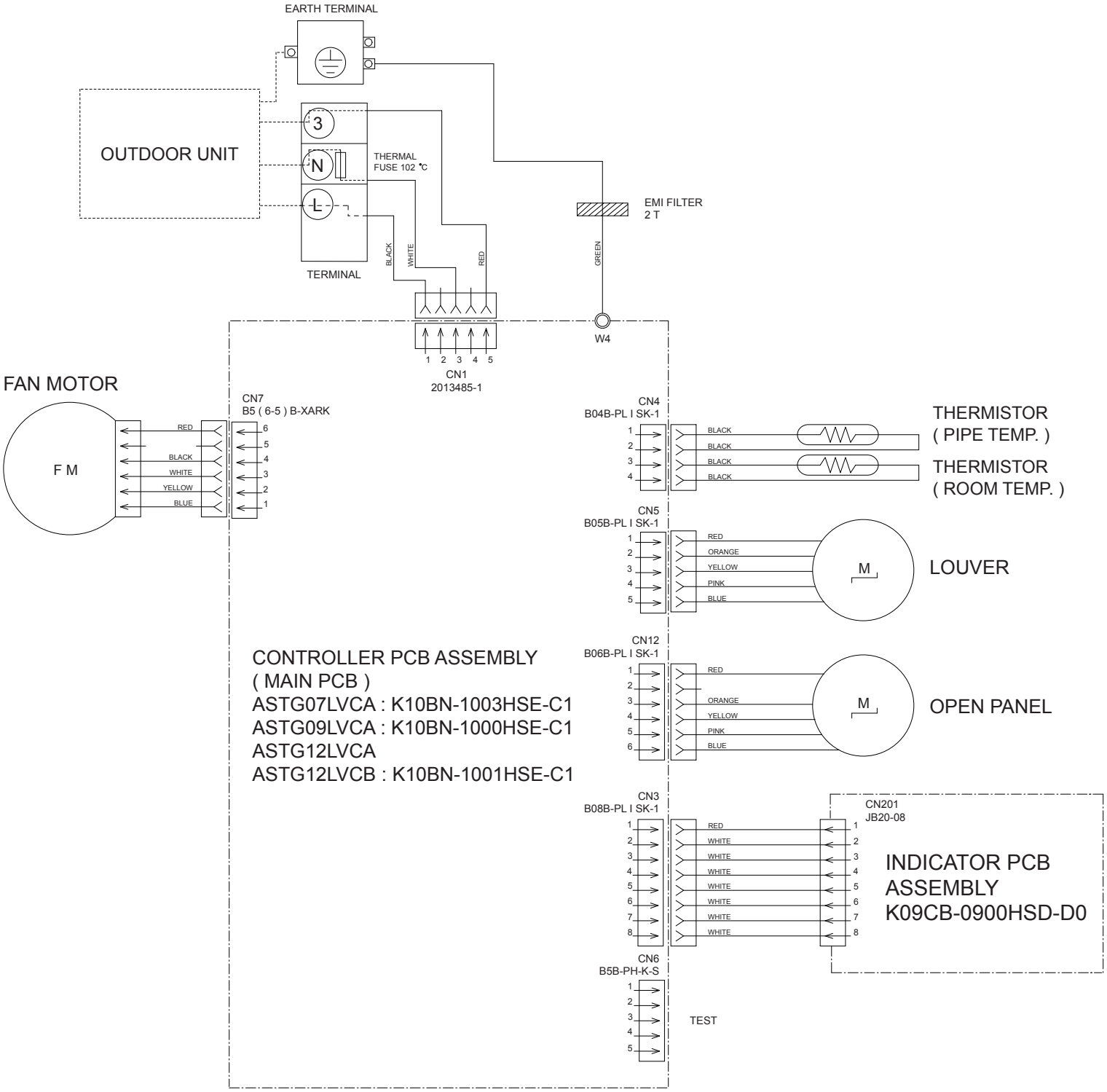

INDOOR UNIT
COMPACT WALL MOUNTED
CONTROLLER PCB ASSEMBLY (MAIN PCB)
ASTG07LVCA : K10BN-1003HSE-C1
ASTG09LVCA : K10BN-1000HSE-C1
ASTG12LVCA, ASTG12LVCB : K10BN-1001HSE-C1

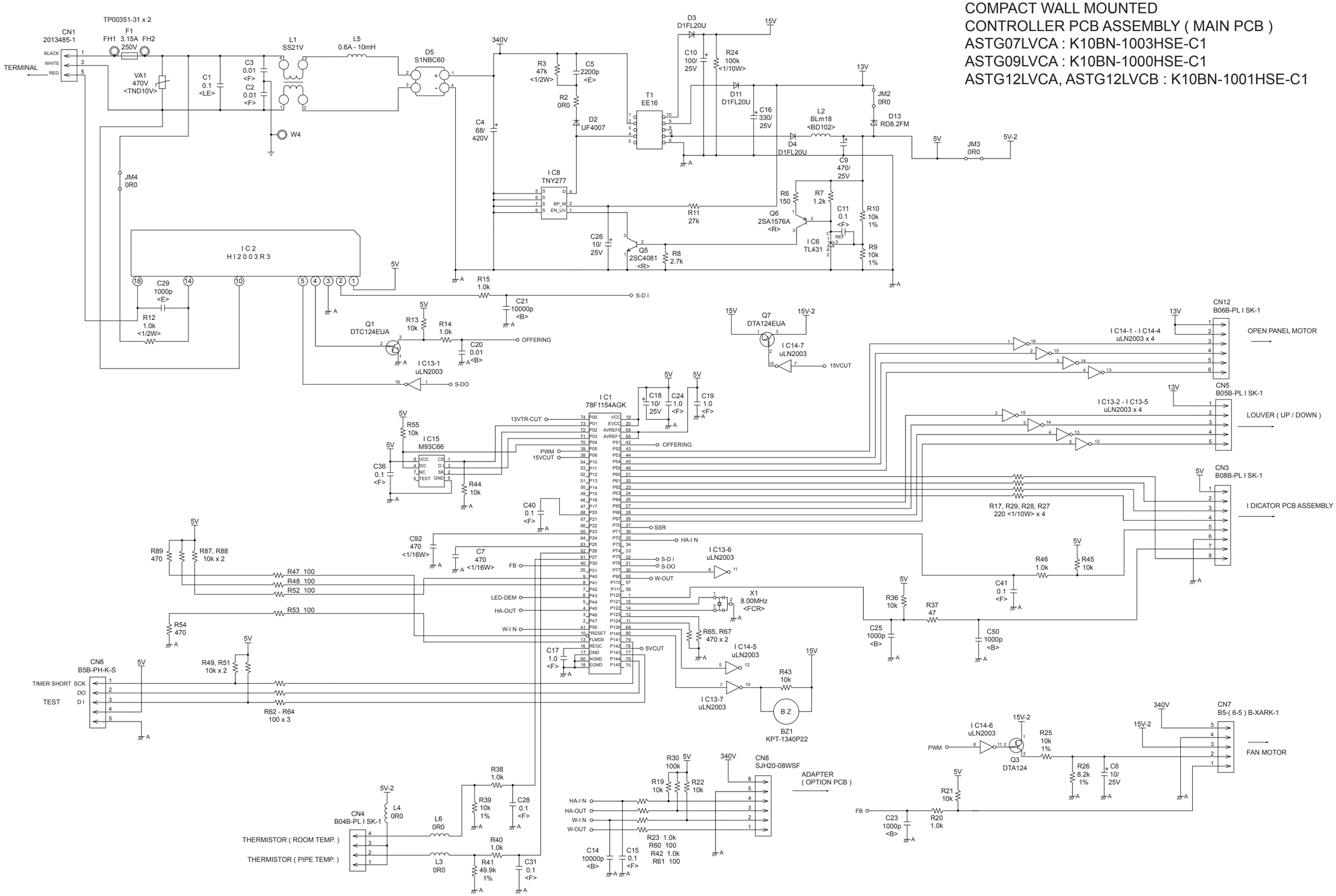

INDOOR UNIT
COMPACT WALL MOUNTED
ASTG07LVCA
ASTG09LVCA
ASTG12LVCA
ASTG12LVCB

INDICATOR PCB ASSEMBLY
K09CB-0900HSD-D0

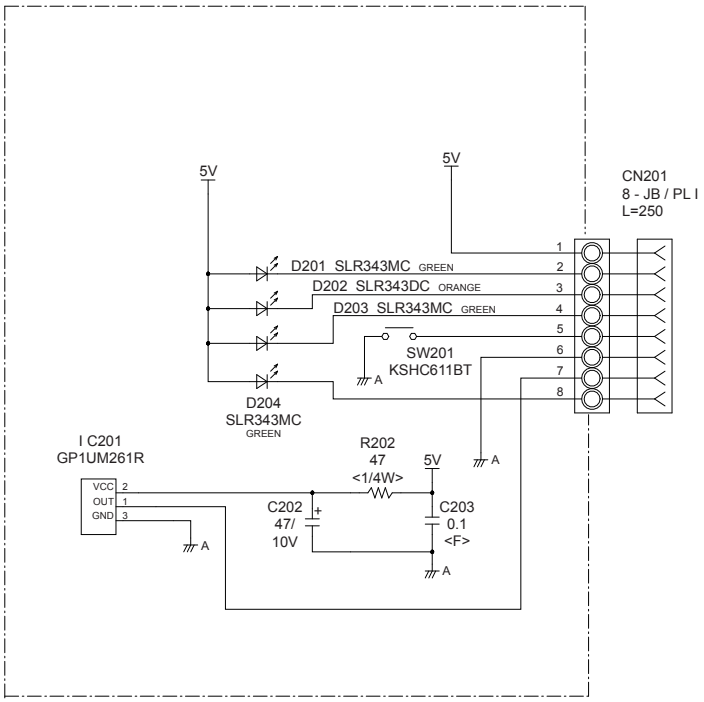

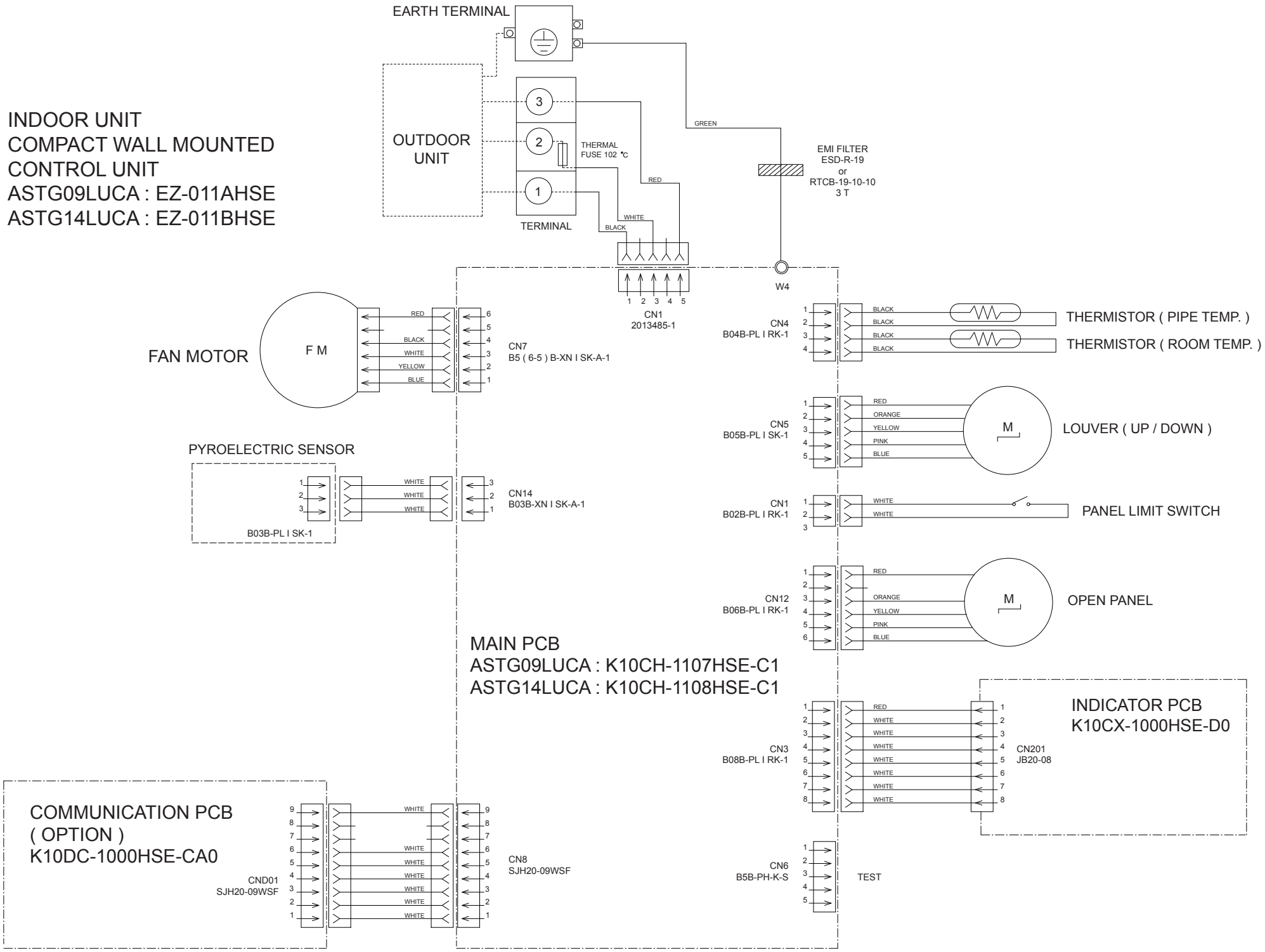

2012.02.28

add

INDOOR UNIT
COMPACT WALL MOUNTED
MAIN PCB
ASTG09LUCA : K10CH-1107HSE-C1
ASTG14LUCA : K10CH-1108HSE-C1

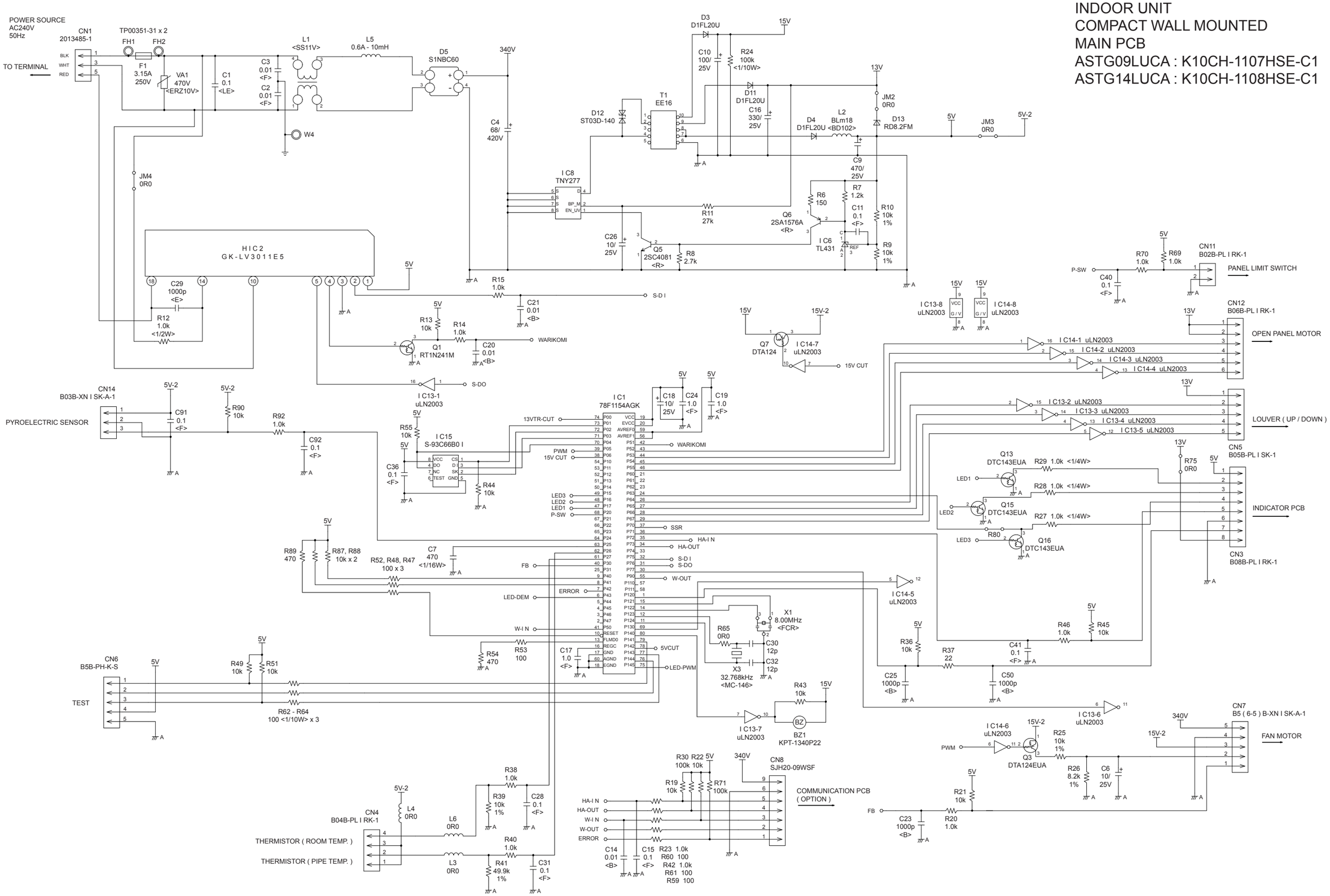

2012.02.28

add

INDOOR UNIT
COMPACT WALL MOUNTED
ASTG09LUCA
ASTG14LUCA
INDICATOR PCB ASSEMBLY
K10CX-1000HSE-D0

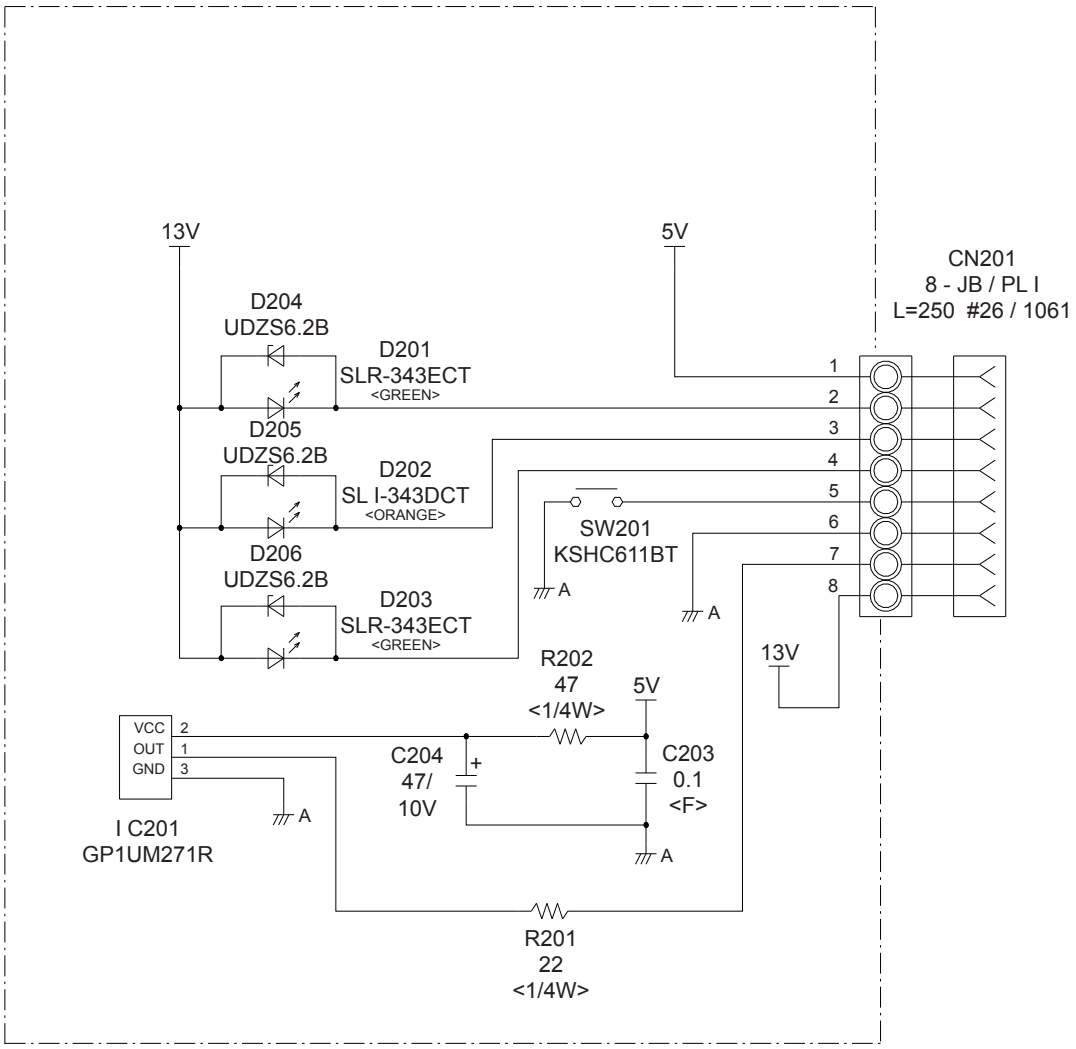

INDOOR UNIT
WALL MOUNTED
CONTROL UNIT
ASTG18LFCA : EZ-010YHSE
ASTG24LFCA, ASTG24LFCB : EZ-01001HSE

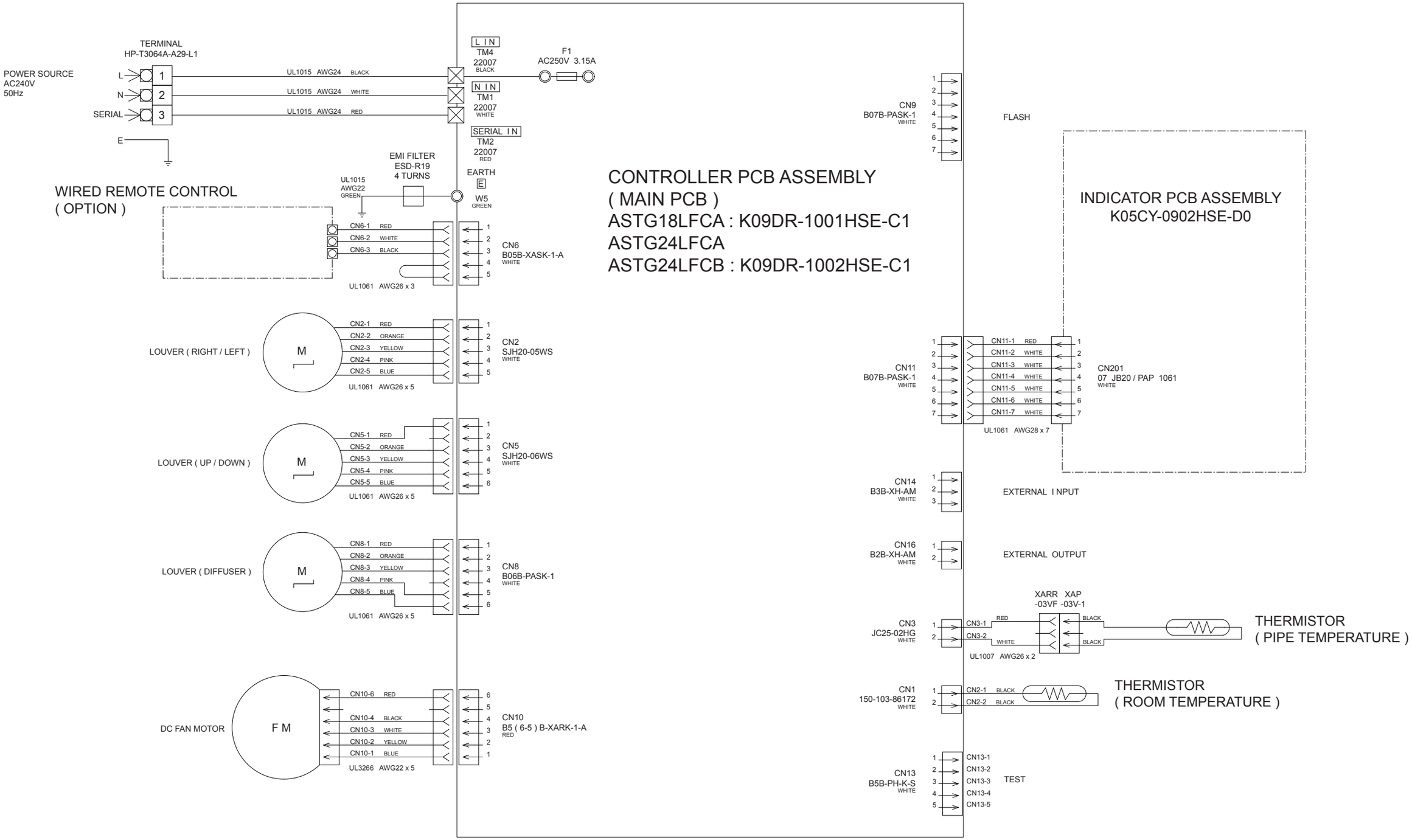

INDOOR UNIT
WALL MOUNTED
CONTROLLER PCB ASSEMBLY (MAIN PCB)
ASTG18LFCA : K09DR-1001HSE-C1
ASTG24LFCA, ASTG24LFCB : K09DR-1002HSE-C1

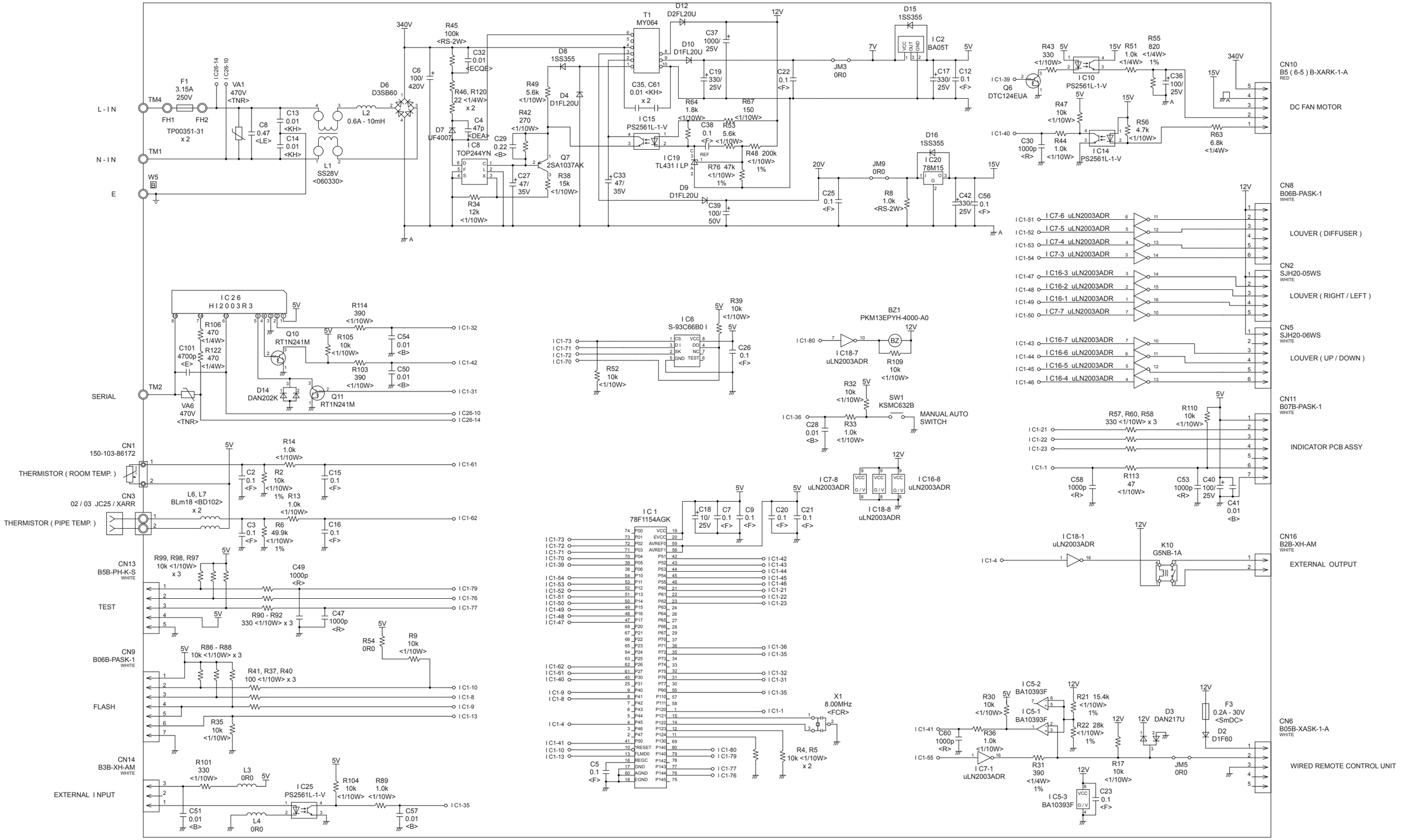

INDOOR UNIT
WALL MOUNTED
ASTG18LFCA
ASTG24LFCA
ASTG24LFCB

INDICATOR PCB ASSEMBLY
K05CY-0902HSE-D0

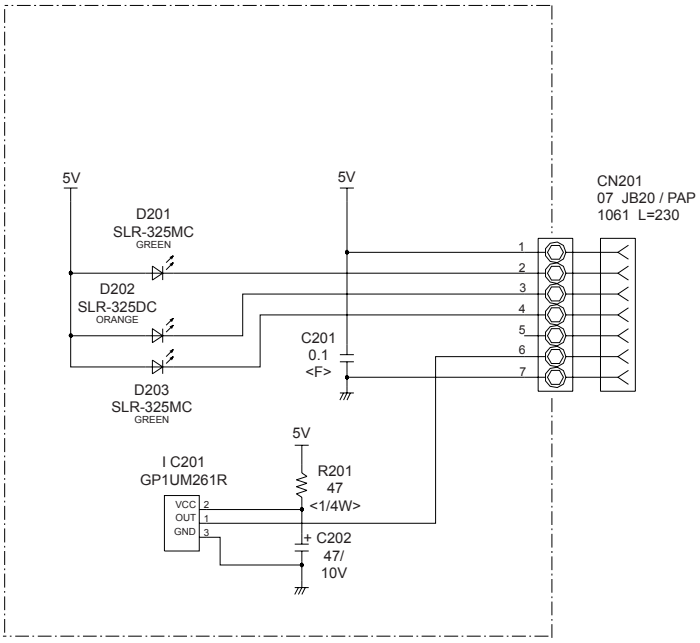

INDOOR UNIT
CASSETTE
CONTROL UNIT
AUTG09LVLA : EZ-01005HSE
AUTG12LVLA : EZ-01006HSE
AUTG18LVLA : EZ-01008HSE

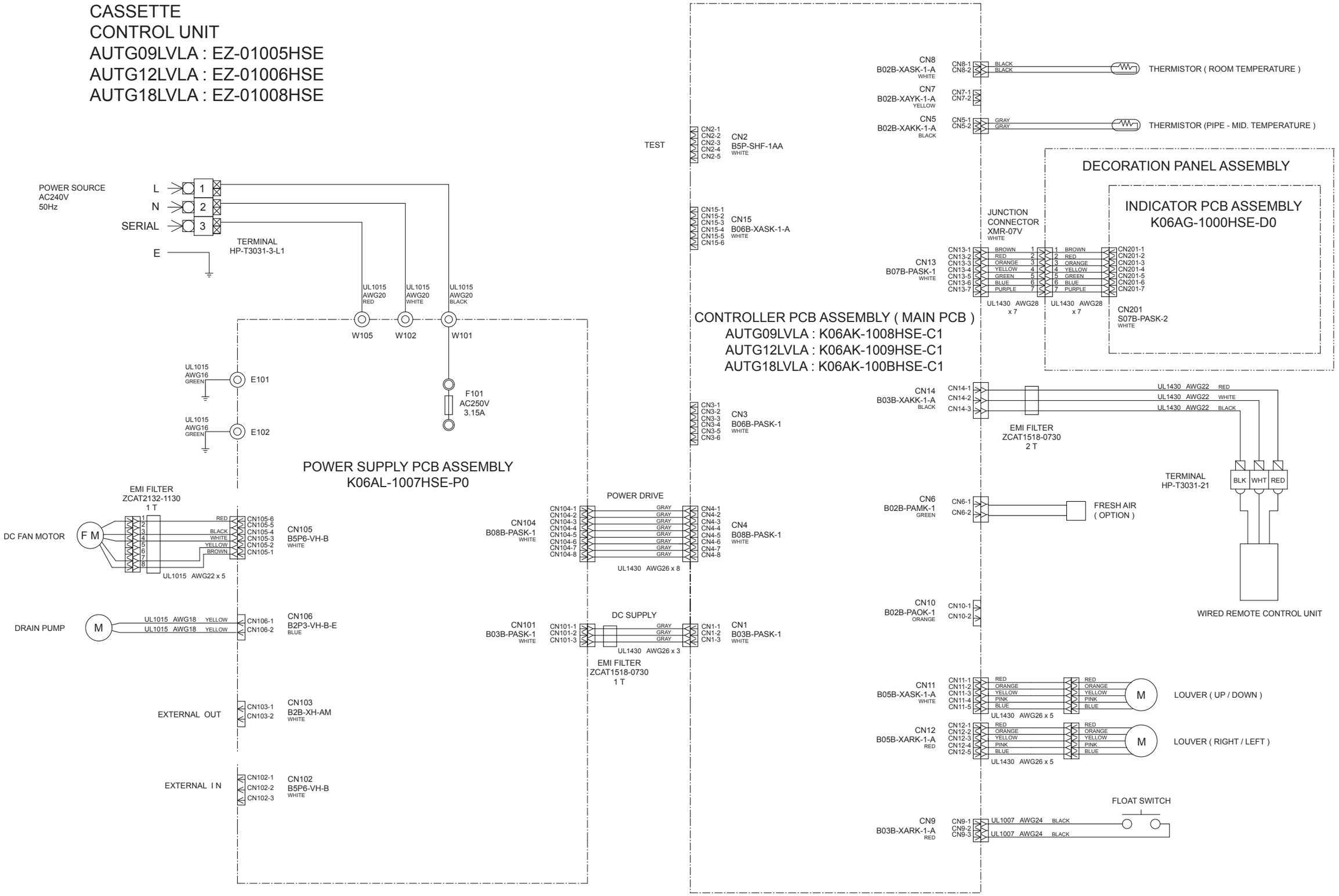

INDOOR UNIT
CONTROLER PCB ASSEMBLY (MAIN PCB)

AUTG09LVLA : K06AK-1008HSE-C1 ARTG09LLTA : K06AK-100DHSE-C1 ABTG18LVTA : K06AK-100LHSE-C1
AUTG12LVLA : K06AK-1009HSE-C1 ARTG12LLTA : K06AK-100EHSE-C1
AUTG18LVLA : K06AK-100BHSE-C1 ARTG18LLTA : K06AK-100GHSE-C1

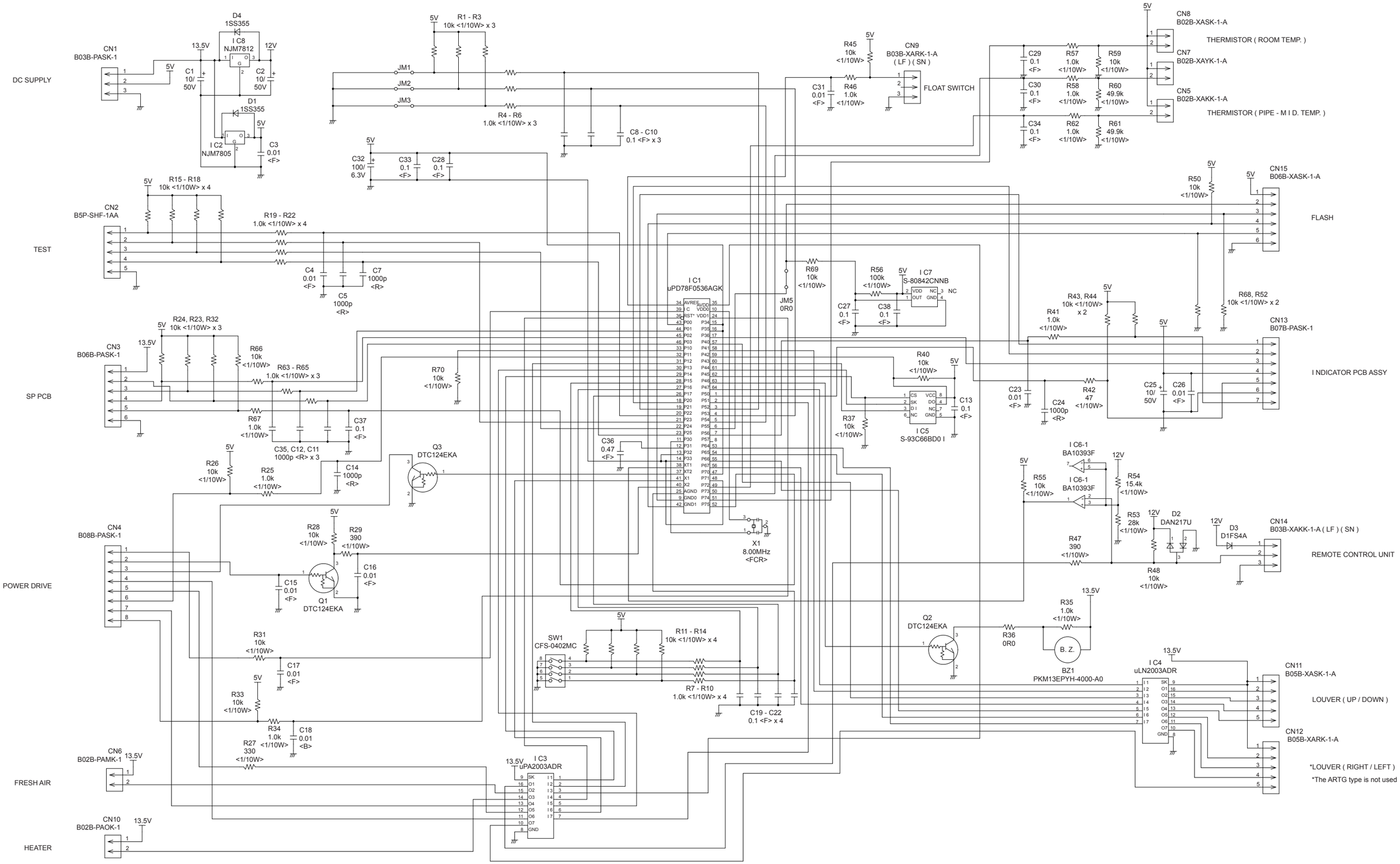

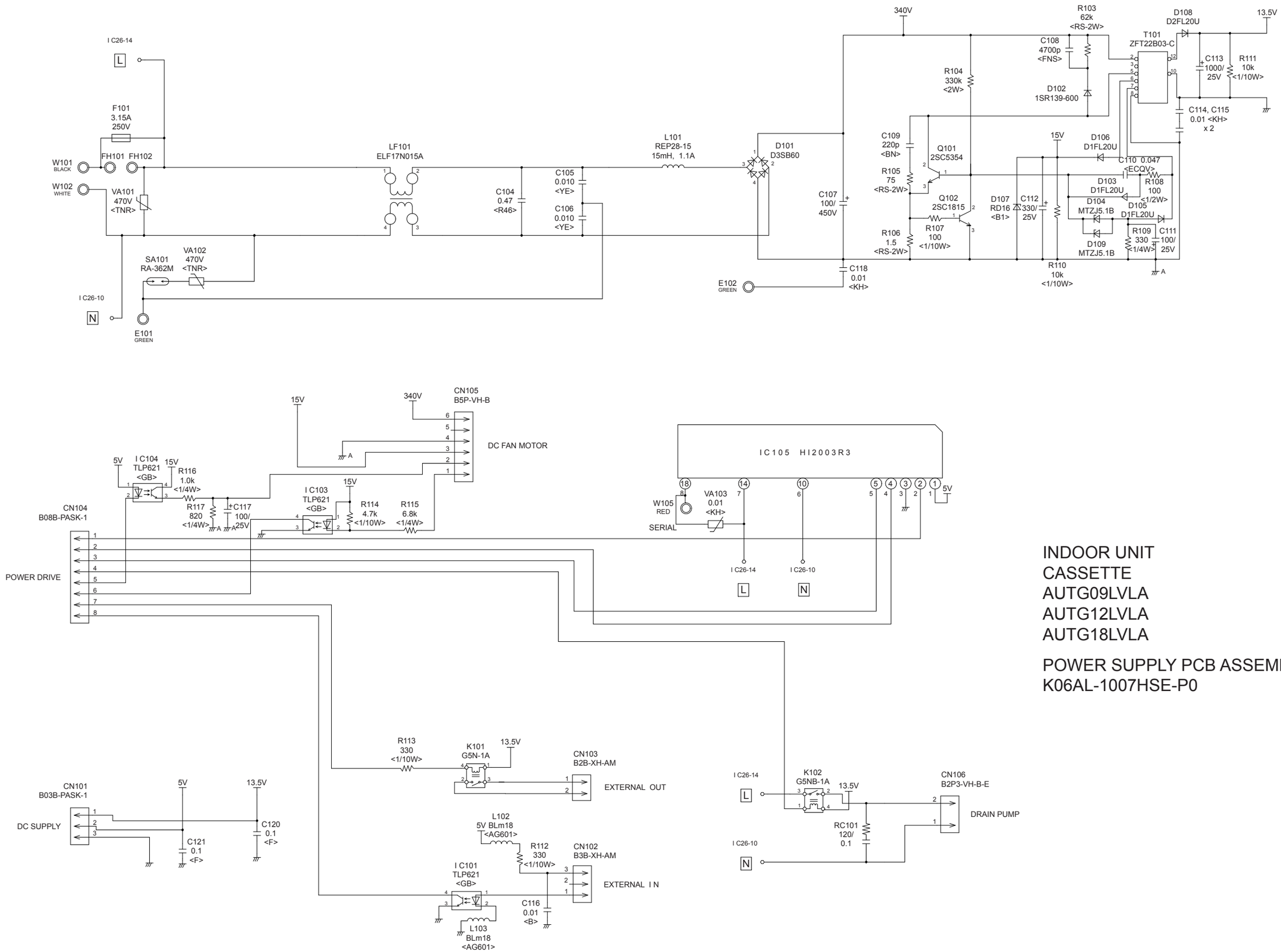

INDOOR UNIT
CASSETTE
AUTG09LVLA
AUTG12LVLA
AUTG18LVLA

POWER SUPPLY PCB ASSEMBLY
K06AL-1007HSE-P0

INDOOR UNIT
CASSETTE
AUTG09LVLA
AUTG12LVLA
AUTG18LVLA

INDICATOR PCB ASSEMBLY (OPTION)
K06AG-1000HSE-D0

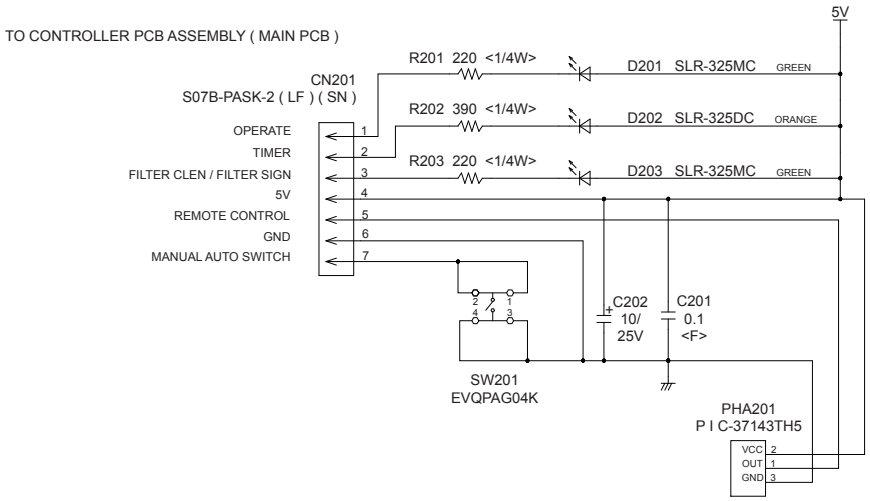

INDOOR UNIT
SLIM DUCT
CONTROL UNIT
ARTG09LLTA : EZ-0100AHSE
ARTG12LLTA : EZ-0100BHSE
ARTG18LLTA : EZ-0100DHSE

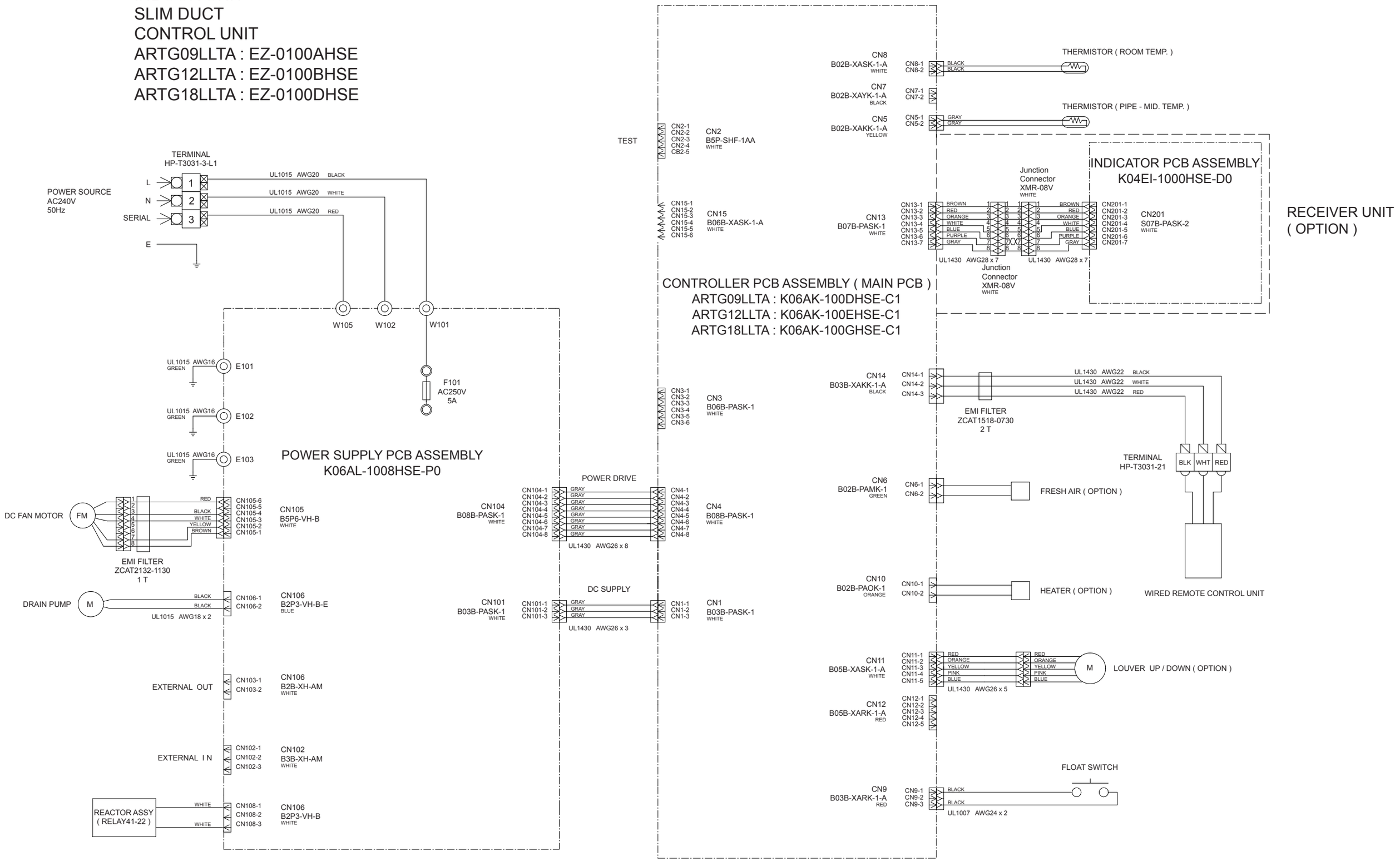

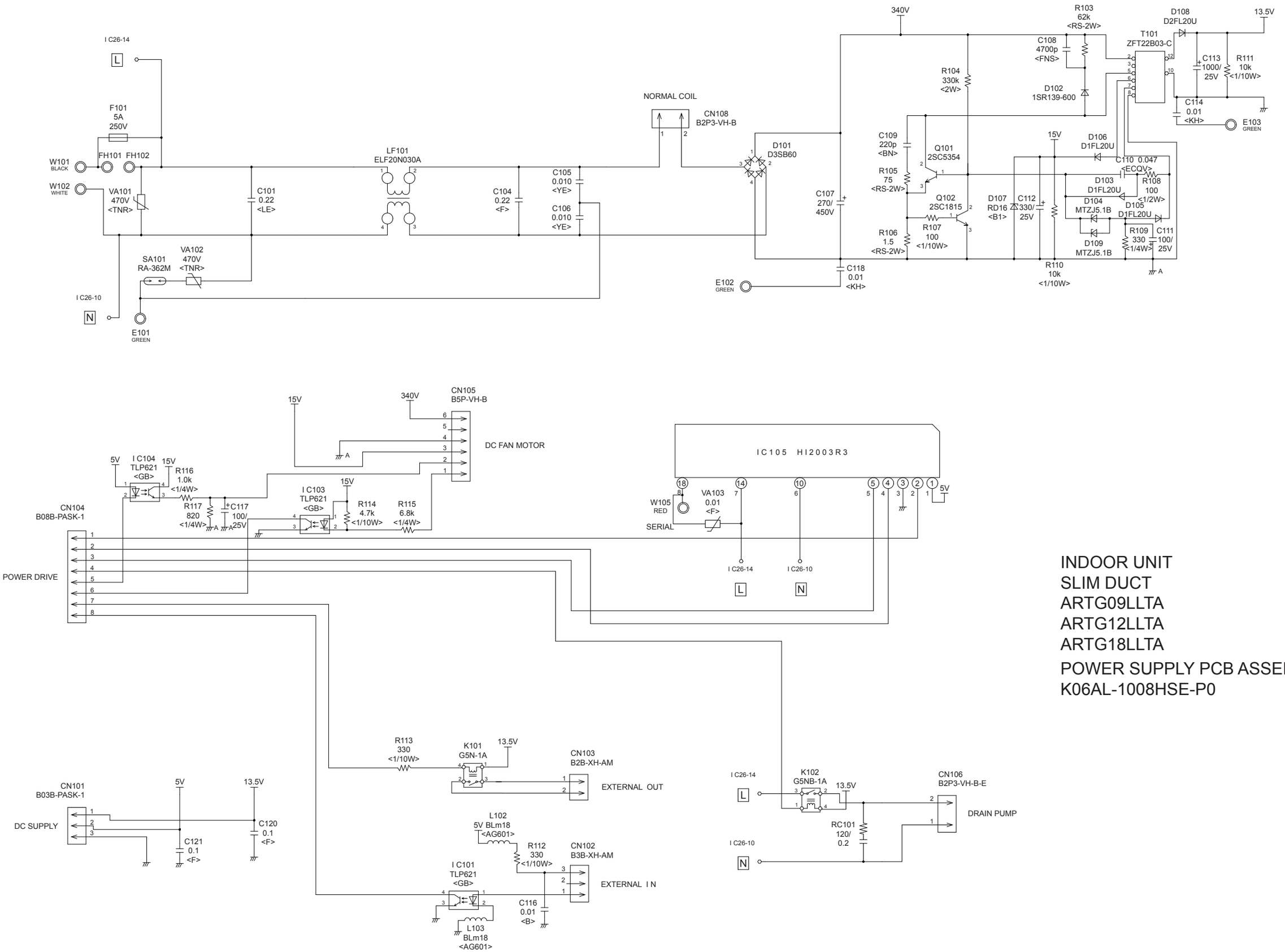

INDOOR UNIT
SLIM DUCT
ARTG09LLTA
ARTG12LLTA
ARTG18LLTA
POWER SUPPLY PCB ASSEMBLY
K06AL-1008HSE-P0

INDOOR UNIT
SLIM DUCT
ARTG09LLTA
ARTG12LLTA
ARTG18LLTA

INDICATOR PCB ASSEMBLY (OPTION)
K04EI-1000HSE-D0

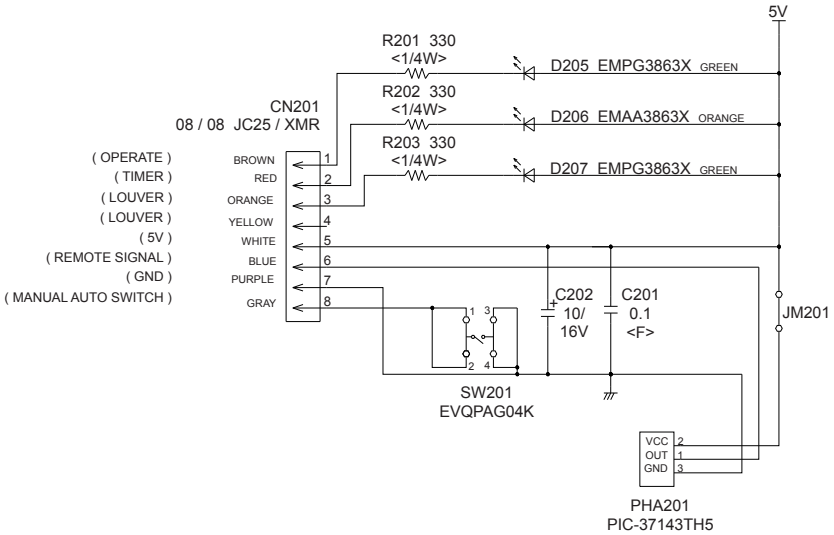

INDOOR UNIT
FLOOR / CEILING
ABTG18LVTA

CONTROL UNIT
EZ-0100GHSE

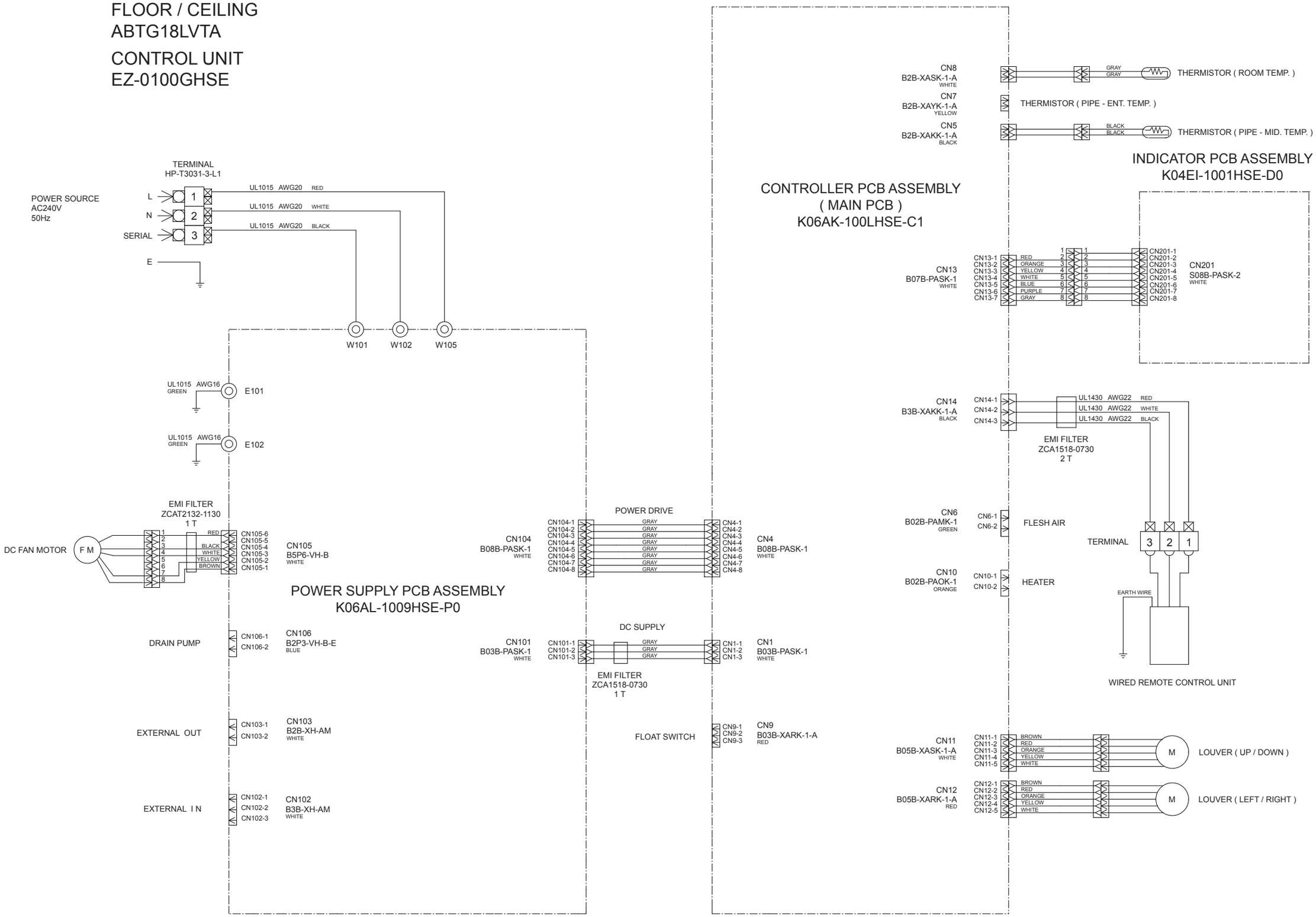

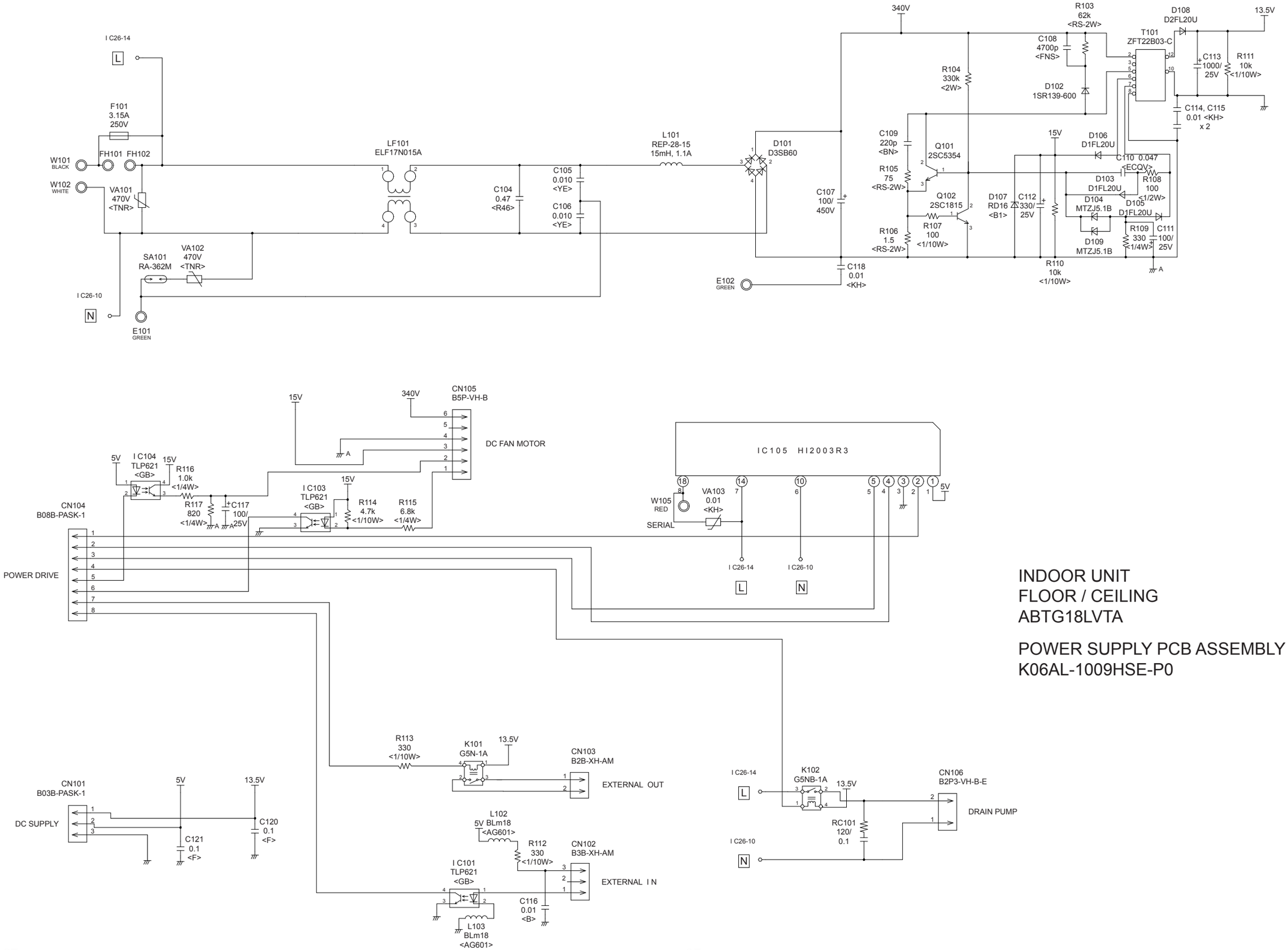

INDOOR UNIT
FLOOR / CEILING
ABTG18LVTA

POWER SUPPLY PCB ASSEMBLY
K06AL-1009HSE-P0

INDOOR UNIT
FLOOR / CEILING
ABTG18LVTA

INDICATOR PCB ASSEMBLY (OPTION)
K04EI-1001HSE-D0

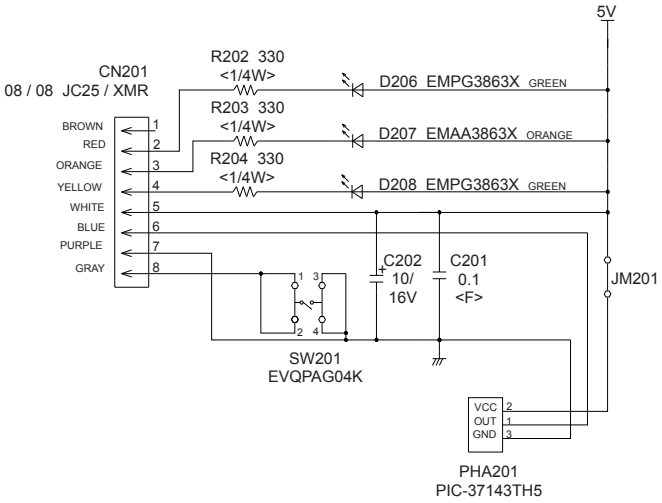

ERROR DETECTION

● : flashing
— : Off

OUTDOOR UNIT

	LED 1	LED 2	LED 3	LED 4
Communication error (outdoor unit to indoor unit A)	● 1 time	—	—	—
Communication error (outdoor unit to indoor unit B)	—	● 1 time	—	—
Communication error (outdoor unit to indoor unit C)	—	—	● 1 time	—
Communication error (outdoor unit to indoor unit D)	—	—	—	● 1 time
Discharge pipe thermistor	● 2 times	—	—	—
Outdoor unit, heat exchanger thermistor (middle)	● 3 times	—	—	—
Outdoor thermistor error	● 4 times	—	—	—
2-way valve thermistor (indoor unit A)	● 5 times	—	—	—
2-way valve thermistor (indoor unit B)	—	● 5 times	—	—
2-way valve thermistor (indoor unit C)	—	—	● 5 times	—
2-way valve thermistor (indoor unit D)	—	—	—	● 5 times
3-way valve thermistor (indoor unit A)	● 6 times	—	—	—
3-way valve thermistor (indoor unit B)	—	● 6 times	—	—
3-way valve thermistor (indoor unit C)	—	—	● 6 times	—
3-way valve thermistor (indoor unit D)	—	—	—	● 6 times
Compressor thermistor error	● 7 times	—	—	—
Heatsink thermistor error	● 8 times	—	—	—
High pressure switch 1 error	● 9 times	—	—	—
High pressure switch 2 error	● 10 times	—	—	—
Indoor unit capacity error	● 11 times	—	—	—
Trip detection	● 12 times	—	—	—
Compressor roter position detetion error	● 13 times	—	—	—
Trip terminal L error	● 14 times	—	—	—
Outdoor unit fan motor error	● 15 times	—	—	—
Outdoor unit PCB microcomputer communication error	● 17 times	—	—	—
Discharge temperature error	● 18 times	—	—	—
Compressor temperature error	● 19 times	—	—	—
4-way valve error	● 20 times	—	—	—
Outdoor unit PCB model information error	● 21 times	—	—	—
Active filter error, PFC circuit error	● 22 times	—	—	—

● : 0.5s on / 0.5s off

◇ : 0.1s on / 0.1s off

( ) : Number of flashing

INDOOR UNIT and WIRED REMOTE CONTROL

If you use a wireless remote control, the lamp on the photo detector unit will output error codes by way of blinking patterns.
If you use a wired type remote control, error codes will appear on the remote control display. See the lamp blinking patterns and error codes in the table. An error display is displayed only during running.

Indoor unit			Wired remote control	Description
OPERATION lamp (green)	TIMER lamp (orange)	ECONOMY lamp (green)		
●(1)	●(1)	◇	11	Serial communication error
●(1)	●(2)	◇	12	Wired remote control communication error
●(1)	●(5)	◇	15	Check run unfinished
●(2)	●(1)	◇	21	Unit number or Refrigerant circuit address setting error [Simultaneous Multi]
●(2)	●(2)	◇	22	Indoor unit capacity error
●(2)	●(3)	◇	23	Combination error
●(2)	●(4)	◇	24	• Connection unit number error (indoor slave unit) [Simultaneous Multi] • Connection unit number error (indoor unit or branch unit) [Flexible Multi]
●(2)	●(7)	◇	27	Master unit, slave unit set-up error [Simultaneous Multi]
●(3)	●(2)	◇	32	Indoor unit PCB model information error
●(3)	●(5)	◇	35	Manual auto switch error
●(4)	●(1)	◇	41	Inlet air temp. sensor error
●(4)	●(2)	◇	42	Indoor unit Heat Ex. Middle temp. sensor error
●(5)	●(1)	◇	51	Indoor unit fan motor error
●(5)	●(3)	◇	53	Drain pump error
●(5)	●(7)	◇	57	Damper error
●(5)	●(15)	◇	5U	Indoor unit error
●(6)	●(2)	◇	62	Outdoor unit main PCB model information error or communication error
●(6)	●(3)	◇	63	Inverter error
●(6)	●(4)	◇	64	Active filter error, PFC circuit error
●(6)	●(5)	◇	65	Trip terminal L error
●(6)	●(10)	◇	6A	Display PCB microcomputers communication error
●(7)	●(1)	◇	71	Discharge temp. sensor error
●(7)	●(2)	◇	72	Compressor temp. sensor error
●(7)	●(3)	◇	73	Outdoor unit Heat Ex. liquid temp. sensor error
●(7)	●(4)	◇	74	Outdoor temp. sensor error
●(7)	●(5)	◇	75	Suction Gas temp. sensor error
●(7)	●(6)	◇	76	• 2-way valve temp. sensor error • 3-way valve temp. sensor error
●(7)	●(7)	◇	77	Heat sink temp. sensor error
●(8)	●(2)	◇	82	• Sub-cool Heat Ex. gas inlet temp. sensor error • Sub-cool Heat Ex. gas outlet temp. sensor error
●(8)	●(3)	◇	83	Liquid pipe temp. sensor error
●(8)	●(4)	◇	84	Current sensor error
●(8)	●(6)	◇	86	• Discharge pressure sensor error • Suction pressure sensor error • High pressure switch error
●(9)	●(4)	◇	94	Trip detection
●(9)	●(5)	◇	95	Compressor rotor position detection error (permanent stop)
●(9)	●(7)	◇	97	Outdoor unit fan motor error
●(9)	●(9)	◇	99	4-way valve error
●(10)	●(1)	◇	A1	Discharge temp. error
●(10)	●(3)	◇	A3	Compressor temp. error
●(10)	●(4)	◇	A4	High pressure error
●(10)	●(5)	◇	A5	Low pressure error
●(13)	●(2)	◇	J2	Branch boxes error [Flexible Multi]

This is possible only on a wired remote control.

If an error occurs, the following display will be shown.
(“Er” will appear in the set room temperature display.)

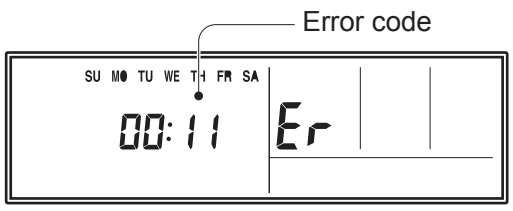

EX. Self-diagnosis

PARTS

OUTDOOR UNIT

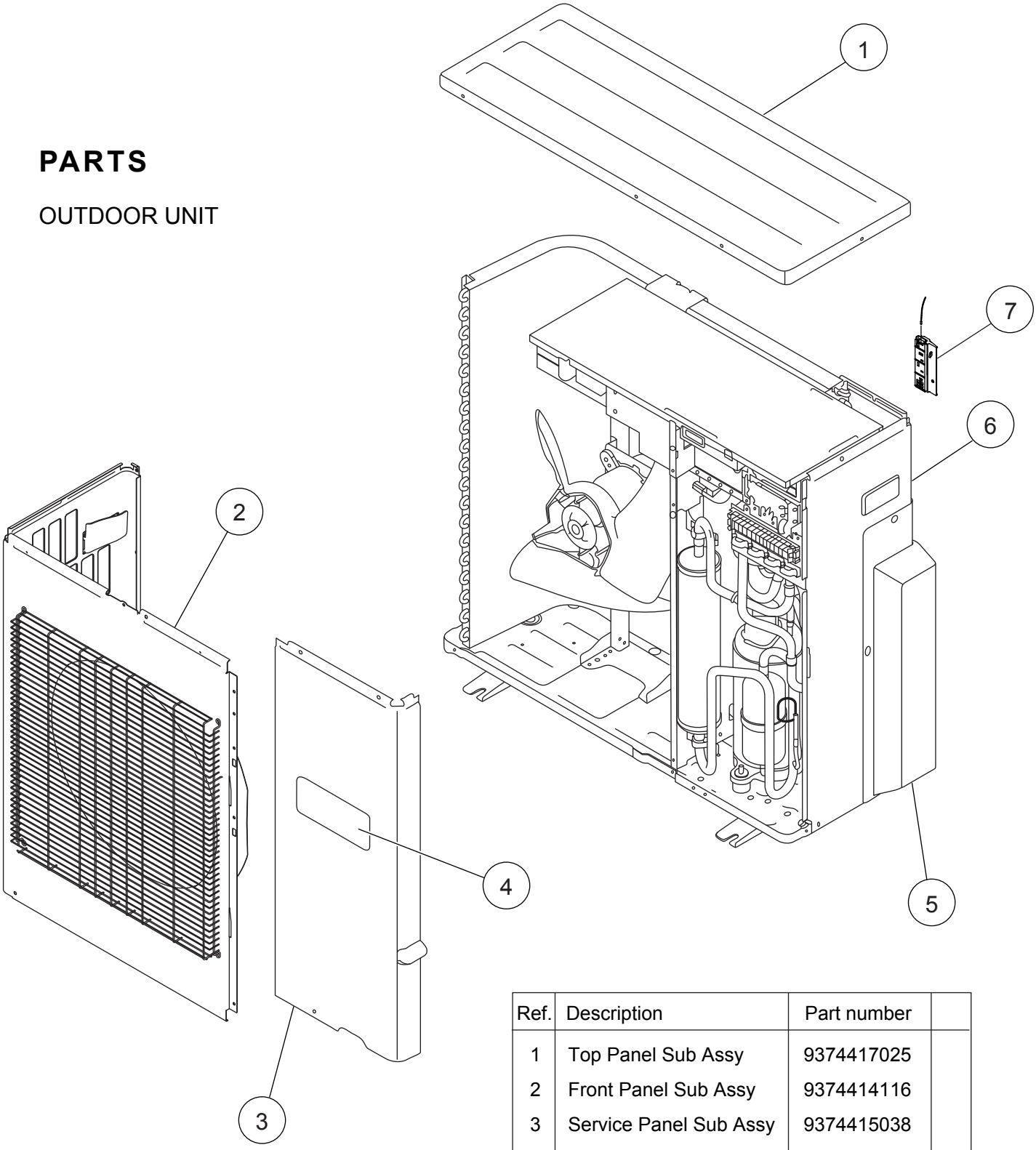

Ref.	Description	Part number	
1	Top Panel Sub Assy	9374417025	
2	Front Panel Sub Assy	9374414116	
3	Service Panel Sub Assy	9374415038	
4	Emblem Rear	9351355005	
5	Valve Cover Sub Assy	9374827015	
6	Right Panel Sub Assy	9374416059	
7	Thermo holder	9374177011	
--	Protective Net	9375381011	

OUTDOOR UNIT

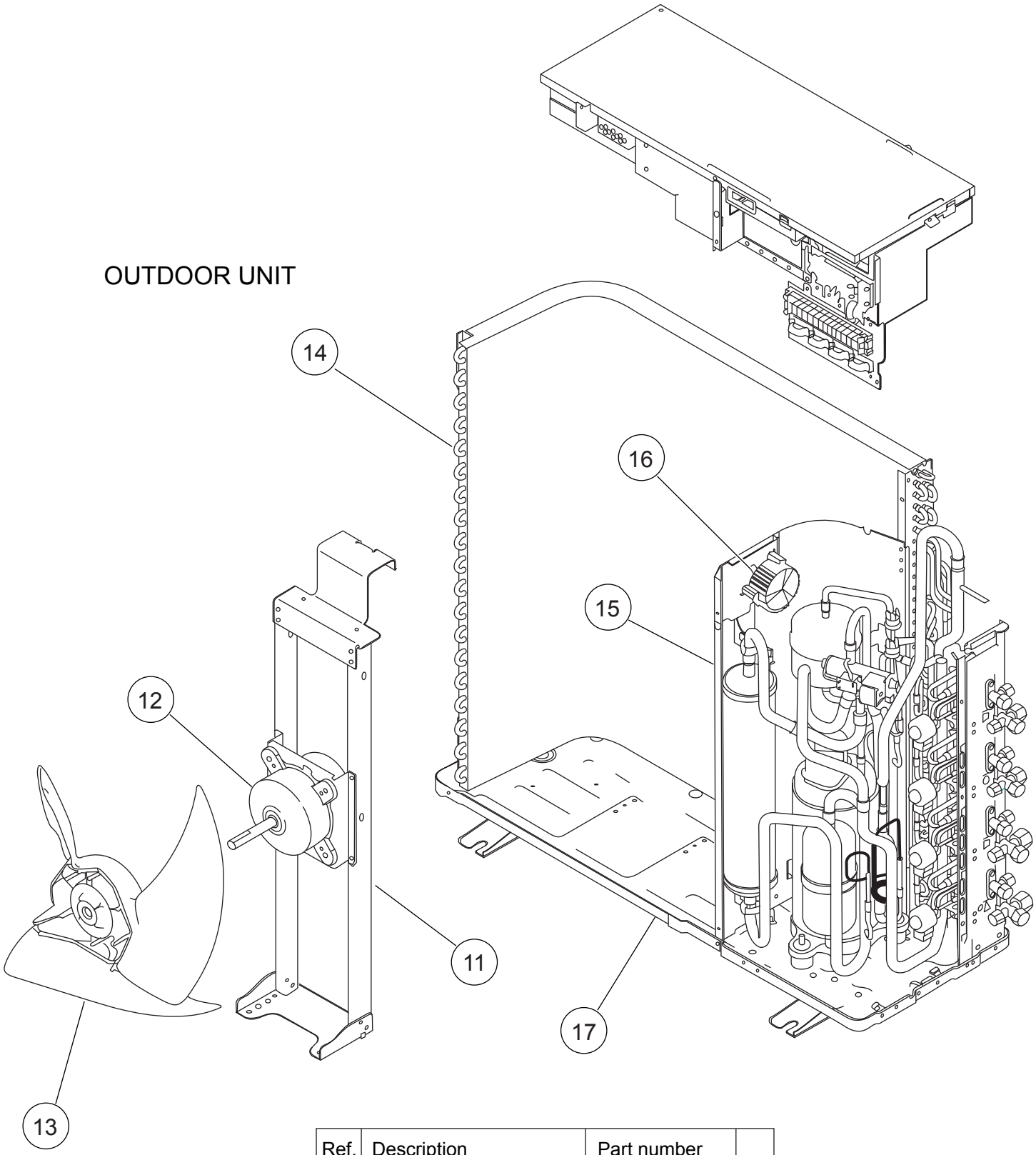

Ref.	Description	Part number	
11	Motor Bracket Sub Assy	9374418053	
12	Fan Motor	9602843015	
13	Propeller Fan Assy	9366378020	
14	Condenser A Assy	9374433056	
15	Separate Wall Sub Assy	9374413065	
16	Choke Coil	9703458019	
17	Base Assy	9374166084	
--	Drain Assy	9303029015	
--	Drain Cap	313166024302	

OUTDOOR UNIT

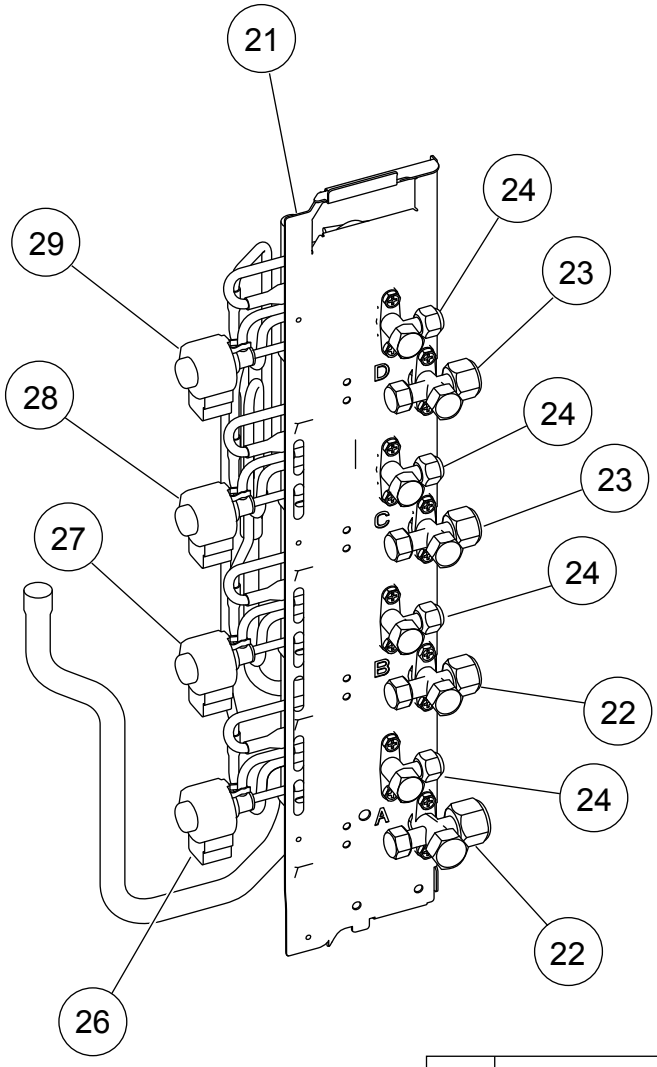

Connector :RED

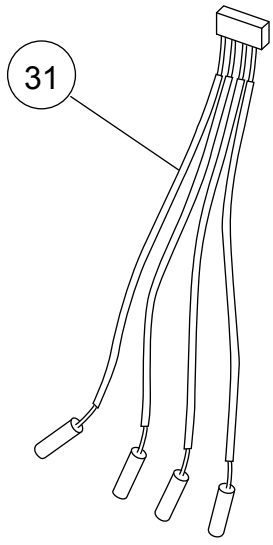

WHITE

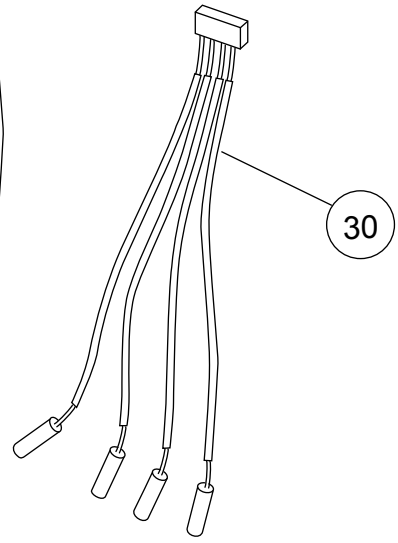

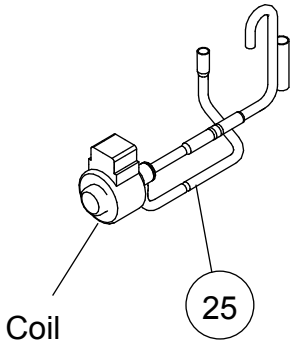

Ref.	Description	Part number	
21	Valve Plate A Assy	9374628025	
22	3-way Valve Assy (1/2")	9378282018	
23	3-way Valve Assy (3/8")	9377958013	
24	2-way Valve Assy	9375614027	
25	Expansion Valve Assy	9370947151	
26	Expansion Valve Coil (A=Red)	9970101069	
27	Expansion Valve Coil (B=White)	9970101038	
28	Expansion Valve Coil (C=Green)	9970101045	
29	Expansion Valve Coil (D=Blue)	9970101052	
30	Pipe Thermistor (White)	9900543020	
31	Pipe Thermistor (Red)	9900543013	

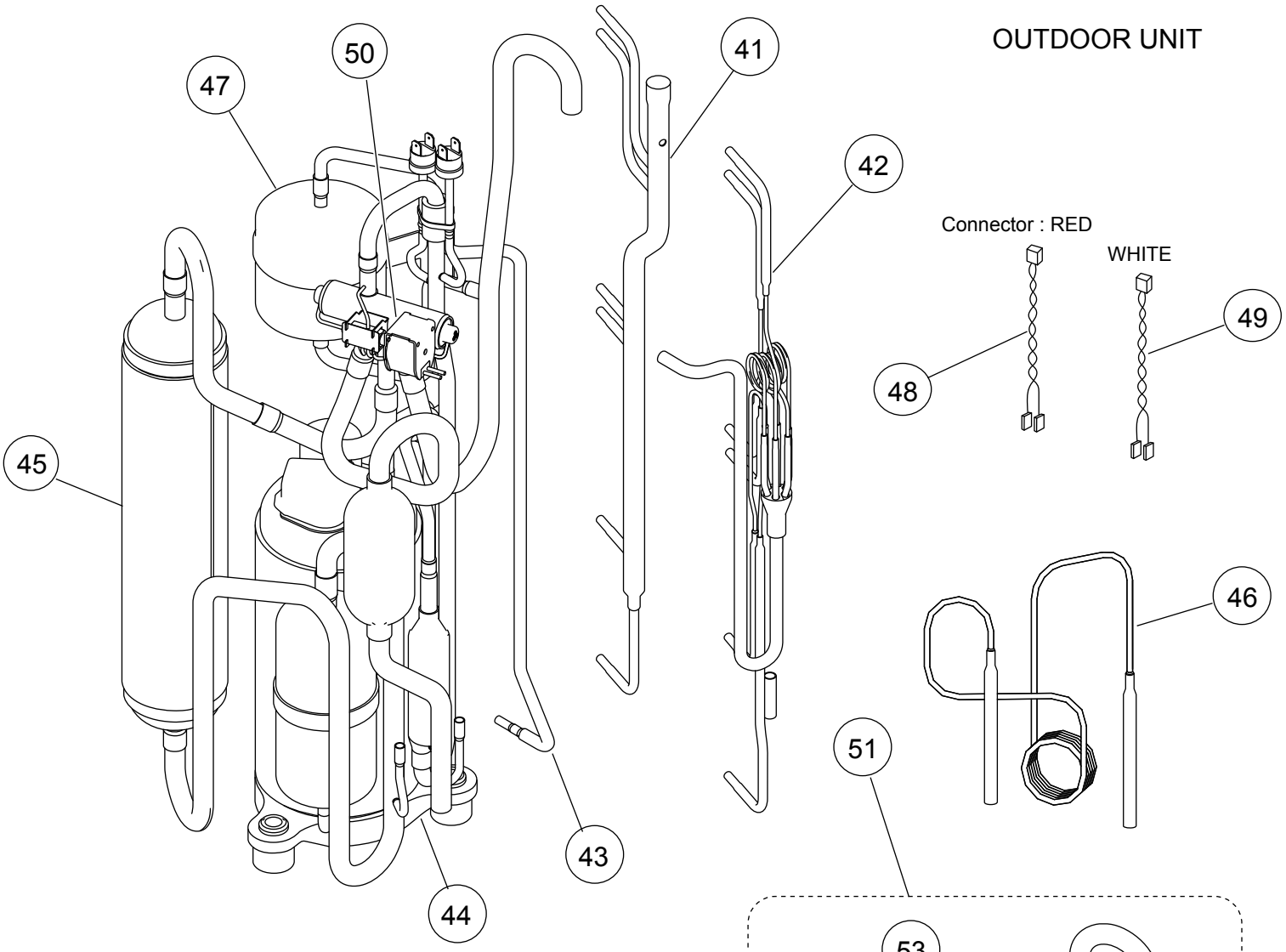

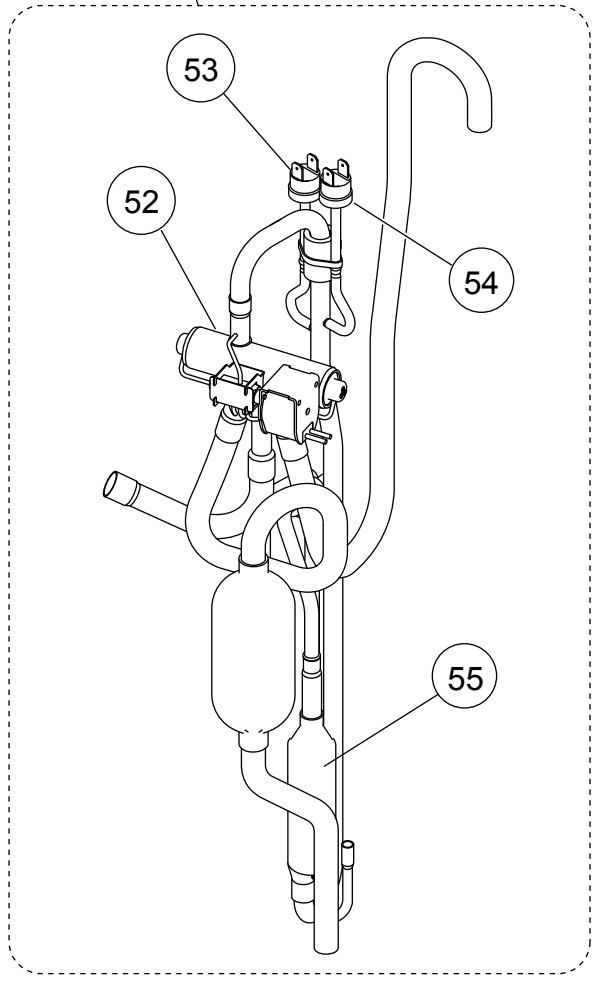

Ref.	Description	Part number	
41	Inlet Pipe Assy	9373461067	
42	Outlet Pipe Assy	9374266067	
43	Condensing Pipe A	9372232057	
44	Compressor Assy	9377946010	
45	Accumulator Sub Assy	9374426072	
46	Capillary Assy	9372197370	
47	Receiver Tank Sub Assy	9373426028	
48	Pressure Switch Wire (Red)	9367595037	
49	Pressure Switch Wire (White)	9367595044	
50	Solenoid	9900165055	
51	4-way Valve Sub Assy	9374425204	
52	4-way Valve	9900164010	
53	Pressure Switch	9900186012	
54	Pressure Switch	9900341015	
55	Discharge Pipe Assy	9372264225	
--	Strainer Assy	9372524015	

OUTDOOR UNIT

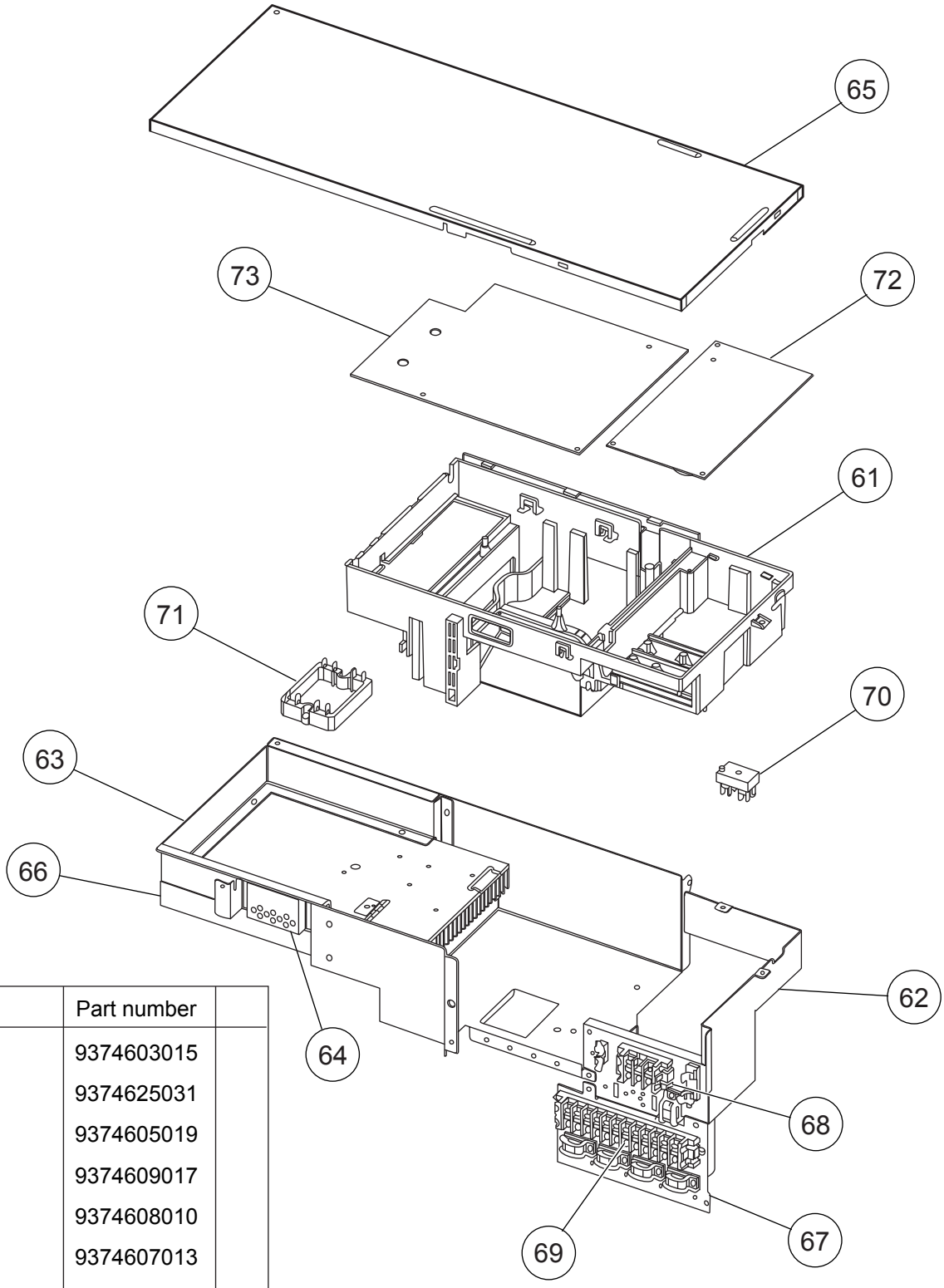

Ref.	Description	Part number	
61	Inverter Box A	9374603015	
62	Inverter Box B Assy	9374625031	
63	Inverter Box C	9374605019	
64	Inverter Box Duct	9374609017	
65	Inverter Box Cover	9374608010	
66	Heat Sink A	9374607013	
67	Inverter Box D	9374606054	
68	Terminal (3P)	9900203016	
69	Terminal (12P)	9358660164	
70	Terminal	9900433017	
71	ACTPM	9703457012	
72	Power Supply PCB Assy	9705647039	
73	Controller PCB Assy	9708013374	
74	Heat Sink Thermistor	9900311018	
75	Discharge Thermistor	9900620004	
76	Thermistor (Outdoor)	9900477035	
77	Heat Exchanger Thermistor	9900540005	
78	Discharge Pipe Thermistor	9900621001	

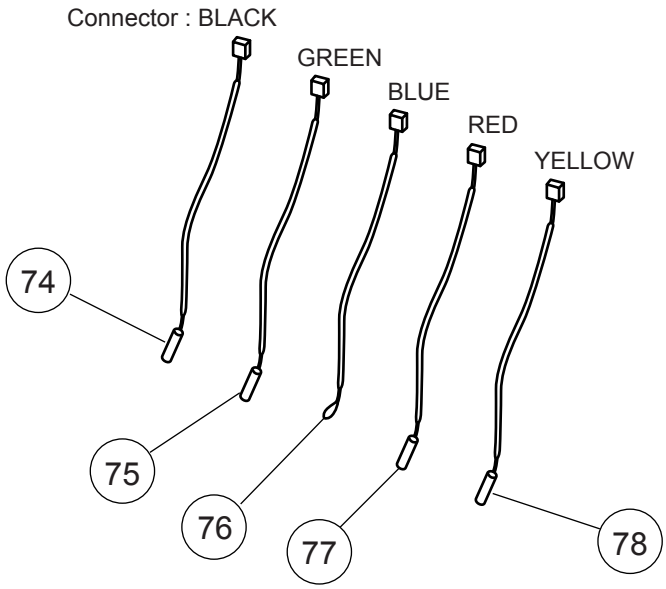

PARTS

INDOOR UNIT
COMPACT WALL MOUNTED
ASTG07LVCA
ASTG09LVCA
ASTG12LVCA
ASTG12LVCB

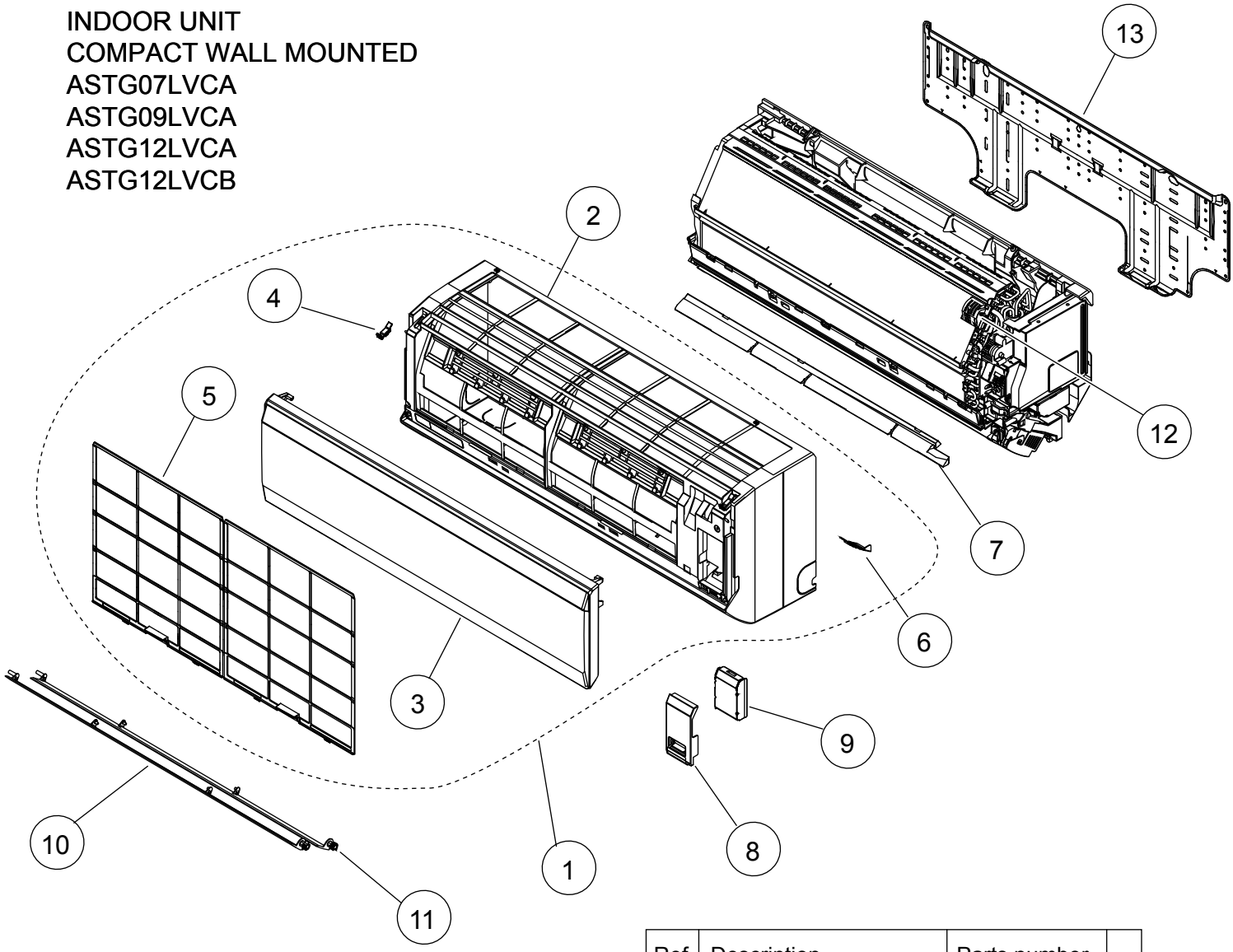

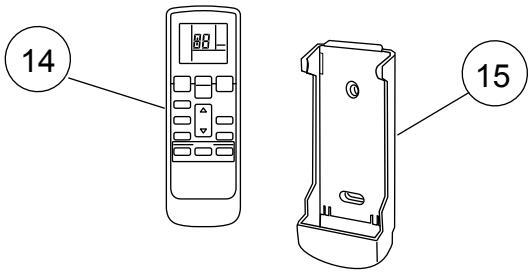

Ref	Description	Parts number	
1	Front Panel Total Assy	9318423037	
2	Front Panel	9318200027	
3	Intake Grille Assy	9318424027	
4	Clamper Grille	9316906006	
5	Air Filter	9318202007	
6	Receiver Window	9318201000	
7	Panel Cover	9318203004	
8	Wire Cover	9318234008	
9	Wire Shield	9318235005	
10	Louver U	9318224009	
11	Louver Z	9318225006	
12	Room thermistor Holder	9311948018	
13	Bracket Panel	9318236002	
14	Remote Control	9379219006	
15	Remote Control Holder	9305642045	
--	Air Clean Filter Assy	9316902022	

INDOOR UNIT
COMPACT WALL MOUNNTED
ASTG07LVCA
ASTG09LVCA
ASTG12LVCA
ASTG12LVCB

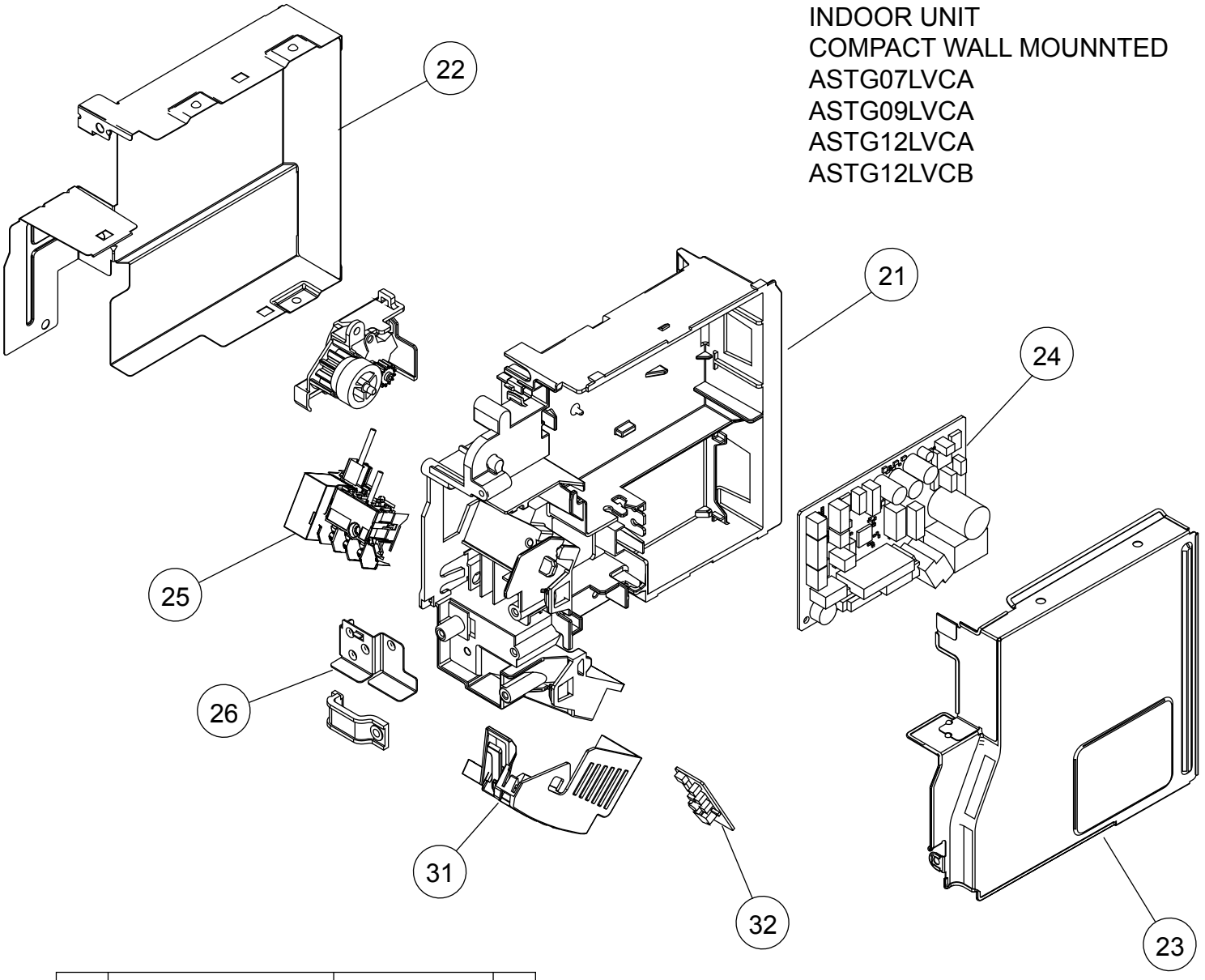

Ref	Description	Parts number	
21	Control Box	9318228007	
22	Box Shield Assy	9318387001	
23	Cover Shield	9318230000	
24	Controller PCB Assy (07)	9708673042	
24	Controller PCB Assy (09)	9708673011	
24	Controller PCB Assy (12)	9708673028	
25	Terminal	9900529017	
26	Earth Terminal	9318231014	
27	Gear Cover	9318211016	
28	Step Motor	9900139179	
29	Panel Gear	9316653009	
30	Gear A	9309994003	
31	Display Case	9318232004	
32	Display PCB Assy	9708365015	
--	Thermistor Assy	9900563011	

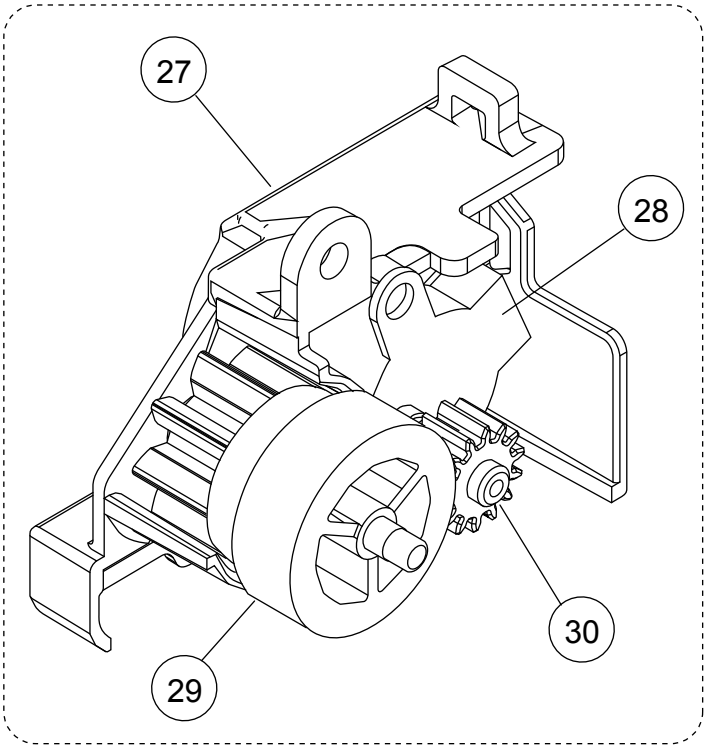

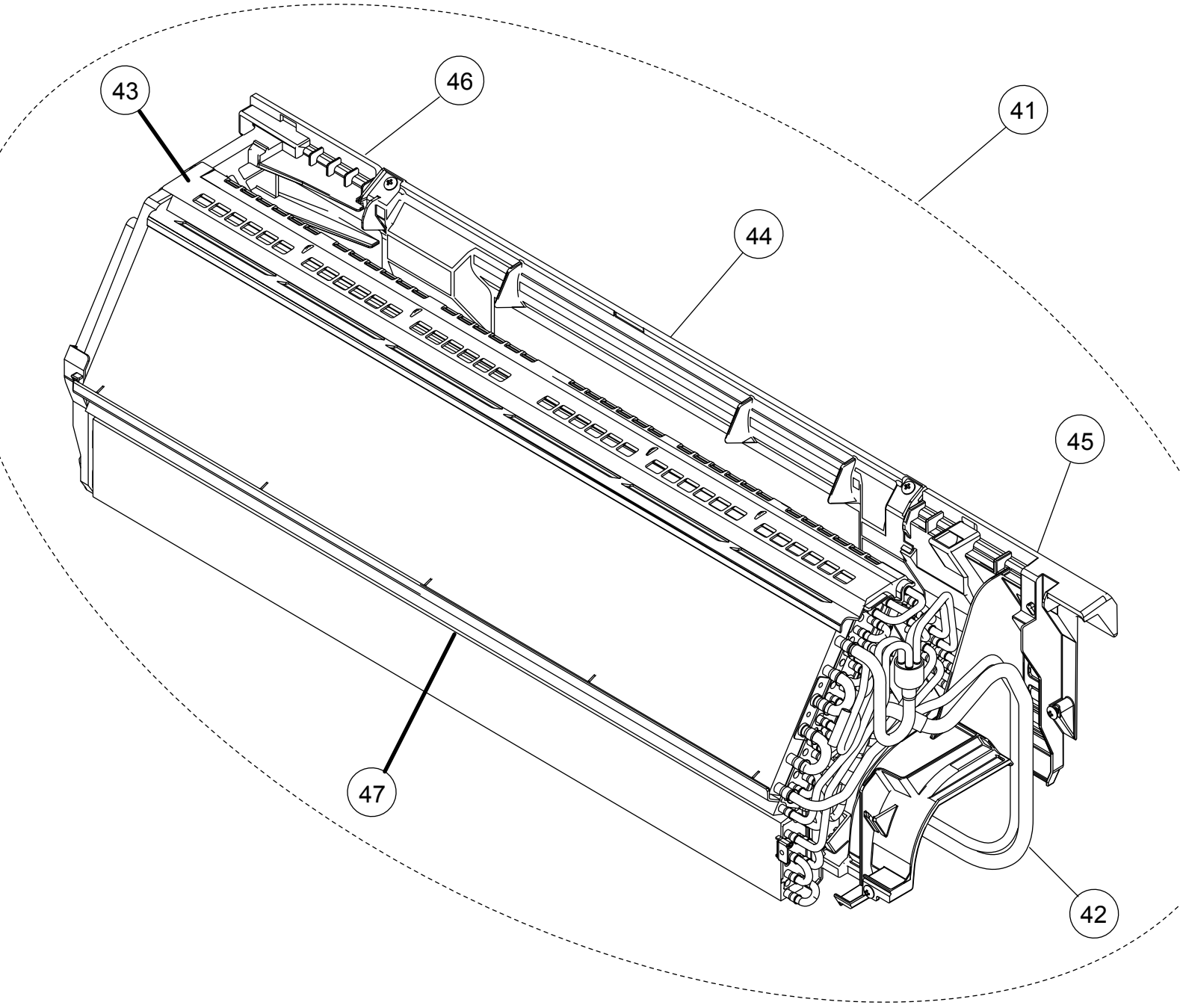

Ref	Description	Parts number	
41	Evaporator Total Assy	9318397000	
42	Joint Pipe Assy	9318400007	
43	Filter Guide	9318223002	
44	Rear Bracket	9318221008	
45	Evaporator Holder R	9318220001	
46	Evaporator Holder L	9318219005	
47	Water Seal B	9318420005	

INDOOR UNIT
COMPACT WALL MOUNTED
ASTG07LVCA
ASTG09LVCA
ASTG12LVCA
ASTG12LVCB

INDOOR UNIT
COMPACT WALL MOUNTED
ASTG07LVCA
ASTG09LVCA
ASTG12LVCA
ASTG12LVCB

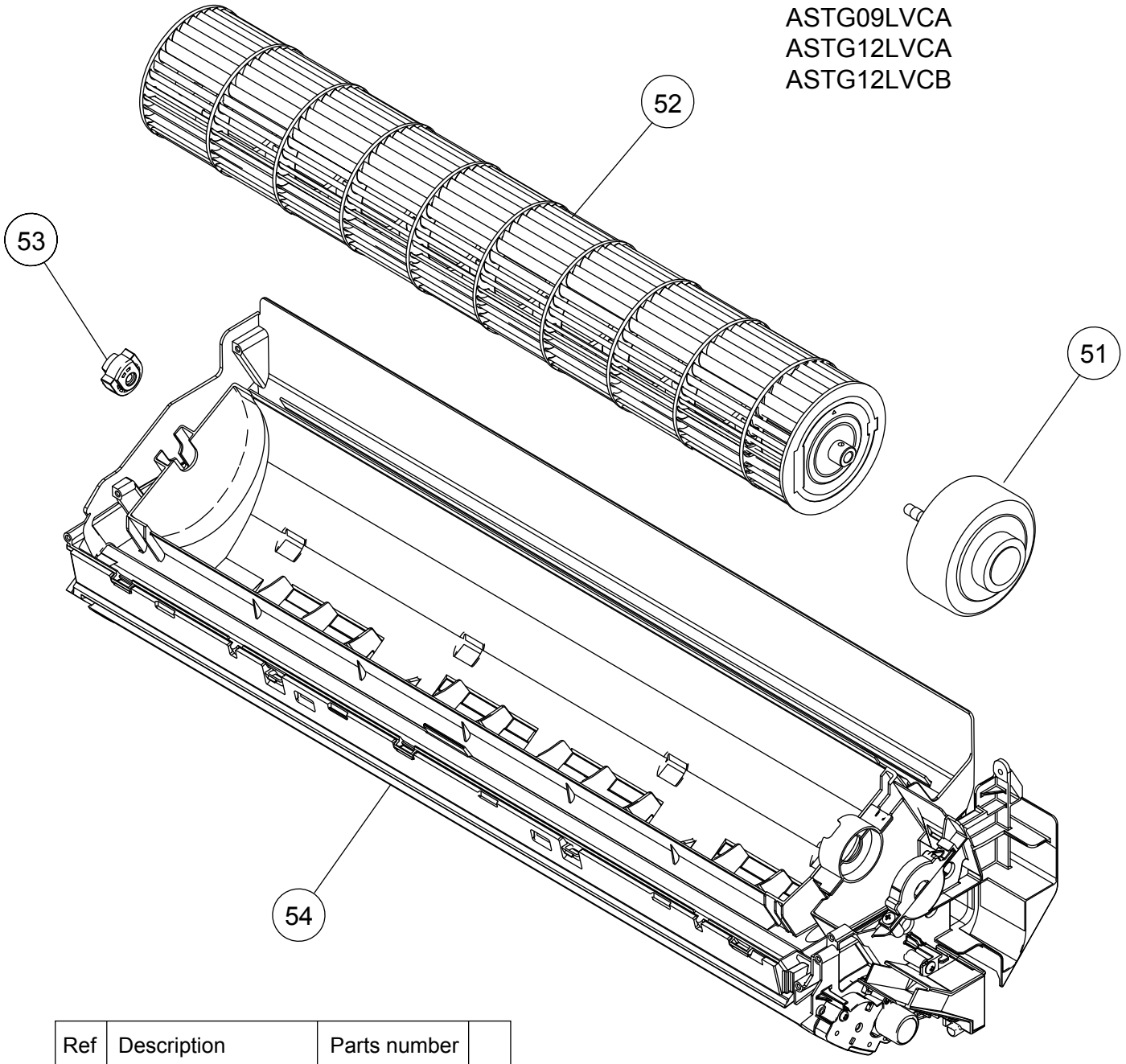

Ref	Description	Parts number	
51	Fan Motor	9602783038	
52	Crossflow Fan Assy	9315024039	
53	Bearing C Assy	9306628017	
54	Casing Assy	9318392029	

INDOOR UNIT
COMPACT WALL MOUNTED
ASTG07LVCA
ASTG09LVCA
ASTG12LVCA
ASTG12LVCB

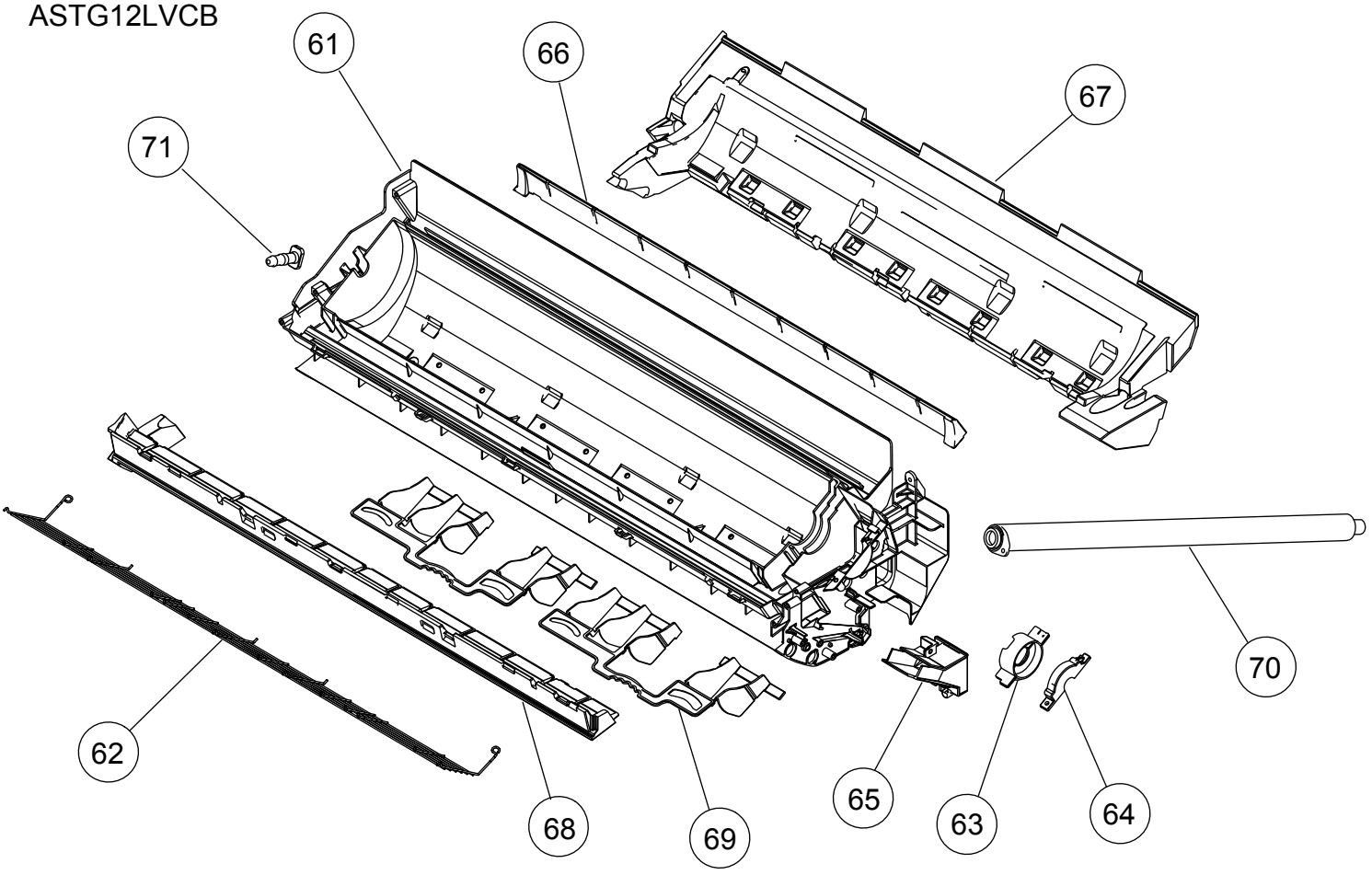

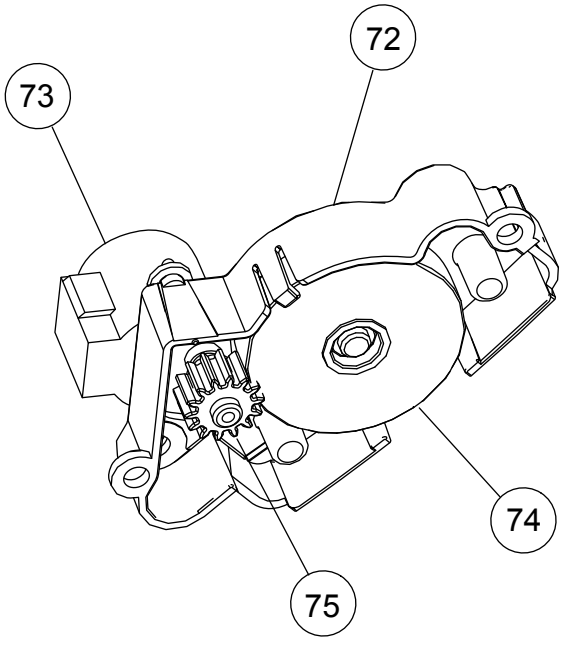

Ref	Description	Parts number	
61	Casing	9318212013	
62	Fan Guard	9318646009	
63	Motor Cover	9316568006	
64	Motor Cover	9316601000	
65	Cable Guide	9316567009	
66	Casing Cover U	9318213003	
67	Casing Cover B	9318214017	
68	Casing Cover F	9318215007	
69	R AND L Louver	9318216004	
70	Drain Hose Assy	9316904019	
71	Drain Cap	9316177017	
72	Louver Gear Holder	9318227000	
73	Motor Step	9900384128	
74	Louver Gear	9318226003	
75	Gear A	9309994003	

INDOOR UNIT
COMPACT WALL MOUNTED
ASTG09LUCA
ASTG14LUCA

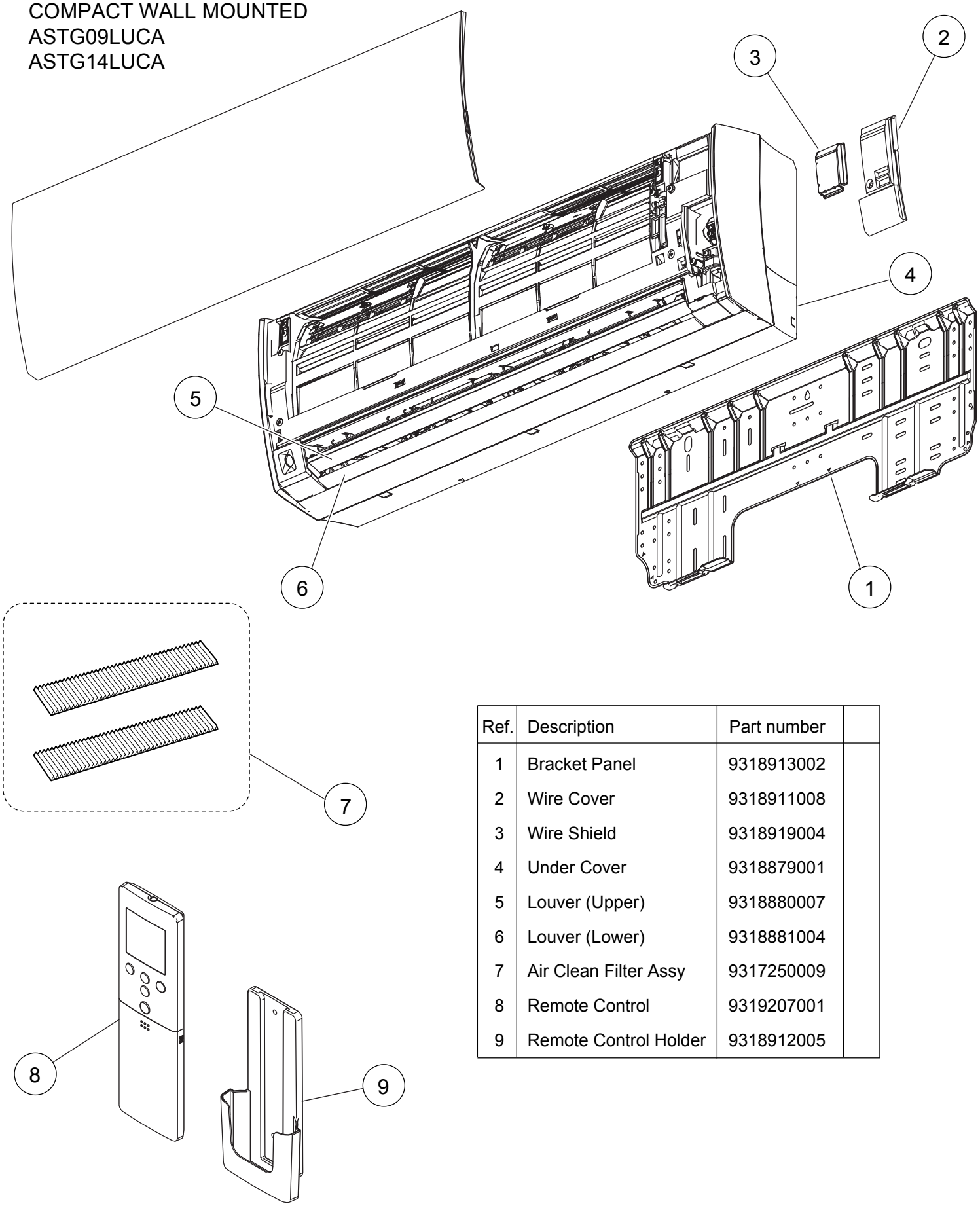

Ref.	Description	Part number	
1	Bracket Panel	9318913002	
2	Wire Cover	9318911008	
3	Wire Shield	9318919004	
4	Under Cover	9318879001	
5	Louver (Upper)	9318880007	
6	Louver (Lower)	9318881004	
7	Air Clean Filter Assy	9317250009	
8	Remote Control	9319207001	
9	Remote Control Holder	9318912005	

INDOOR UNIT
COMPACT WALL MOUNTED
ASTG09LUCA
ASTG14LUCA
Front panel

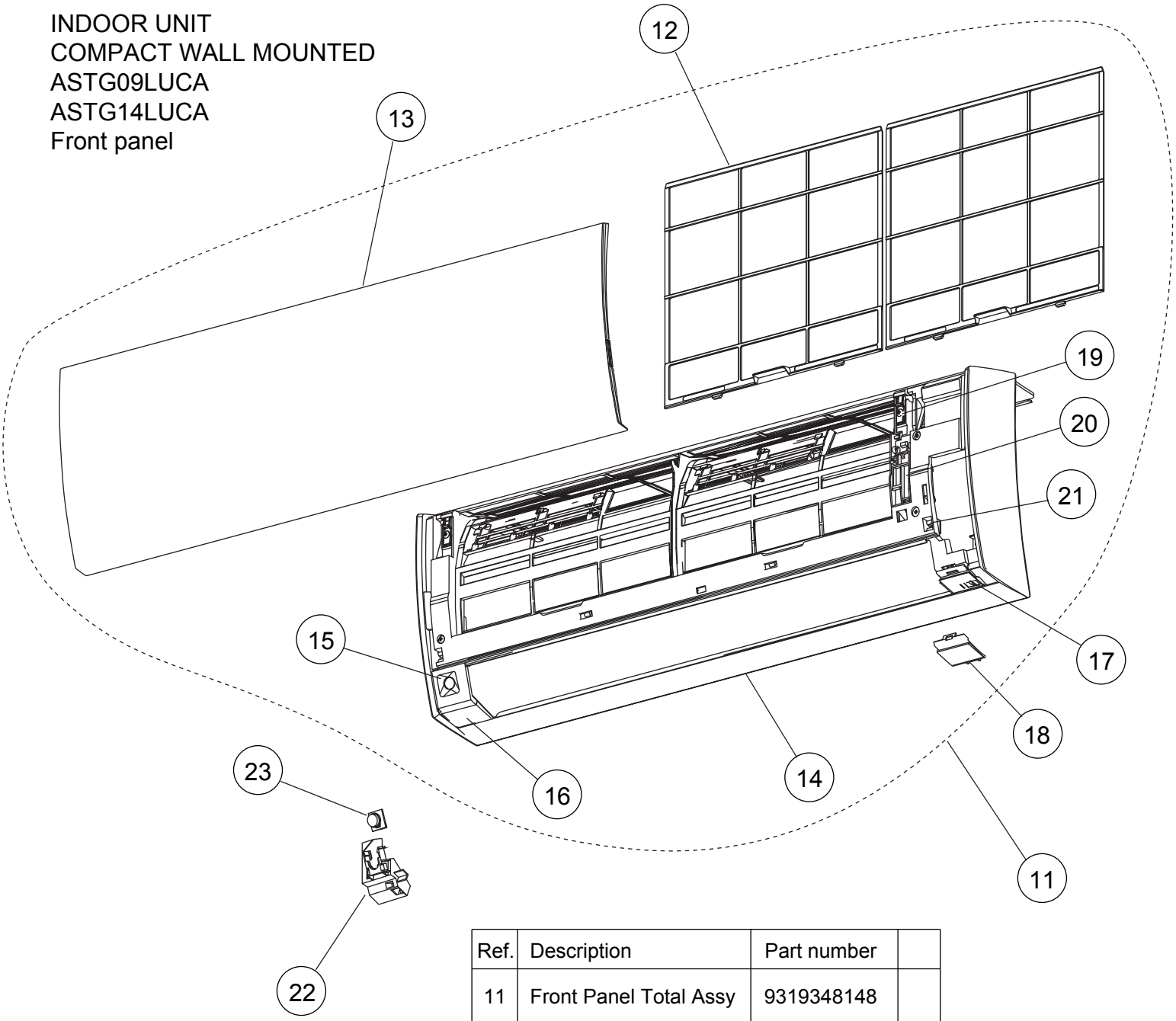

Ref.	Description	Part number	
11	Front Panel Total Assy	9319348148	
12	Air Filter	9318883008	
13	Intake Grille Assy	9319351155	
14	Front Panel	9318876000	
15	Front Panel Cover T	9318909005	
16	Display Plate Holder L	9318894004	
17	Display Plate Holder R	9318895001	
18	Display Plate R	9318893007	
19	Arm Cover	9318900002	
20	Grille Stay	9318899009	
21	Grille Clamper B	9316951006	
22	Motion LED Display Case	9318907001	
23	Pyroelectric Sensor	9317755023	

INDOOR UNIT
COMPACT WALL MOUNTED
ASTG09LUCA
ASTG14LUCA
Evaporator

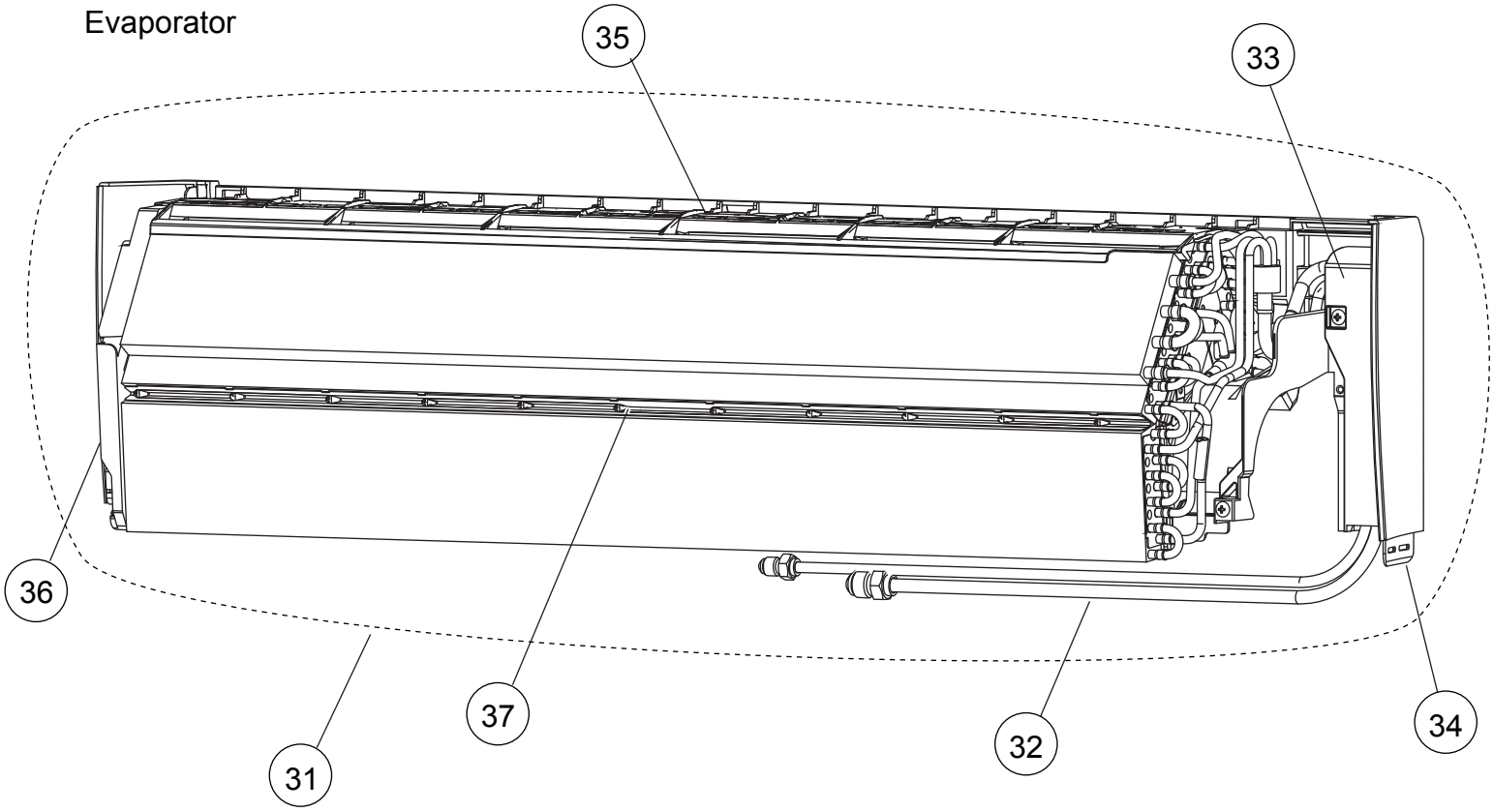

Ref.	Description	Part number	
31	Evaporator Total Assy (09)	9319327006	
31	Evaporator Total Assy (14)	9319327013	
32	Joint Pipe Assy (09)	9319322001	
32	Joint Pipe Assy (14)	9319322018	
33	Joint Pipe Holder	9318901009	
34	Base	9318874006	
35	Filter Guide	9318887006	
36	Evaporator Holder L	9318875003	
37	Air Seal	9319295008	

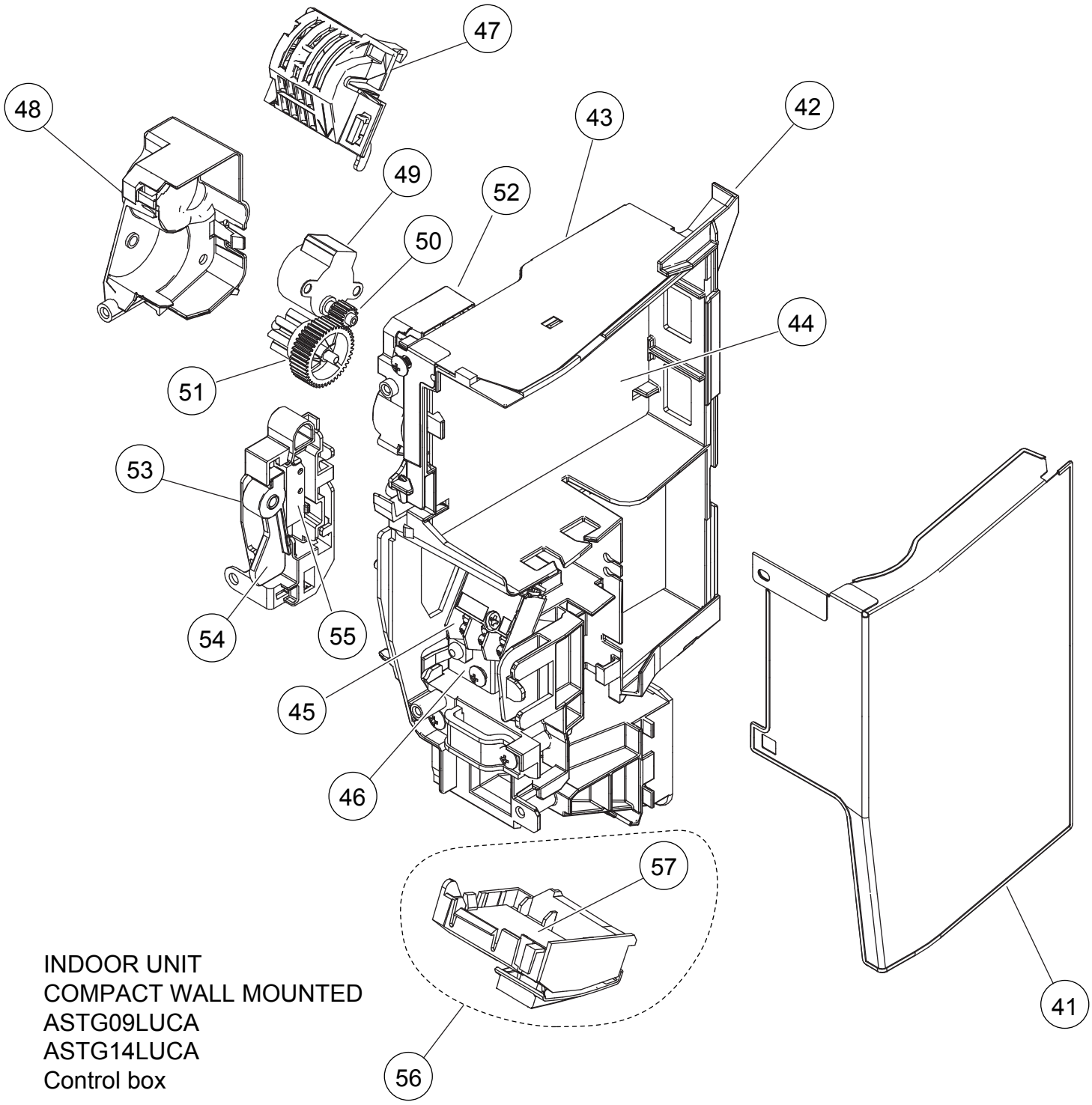

INDOOR UNIT
COMPACT WALL MOUNTED
ASTG09LUCA
ASTG14LUCA
Control box

Ref.	Description	Part number	
41	Cover Shield A	9318916003	
42	Control Box	9318882001	
43	Box Shield Assy	9319344003	
44	Main PCB (09)	9708713168	
44	Main PCB (14)	9708713175	
45	Terminal	9900638009	
46	Earth Terminal	9318918007	
47	Room Thermistor Holder	9319068008	
48	Gear Cover	9318902006	
49	Step Motor	9900384166	

Ref.	Description	Part number	
50	Gear B	9319294001	
51	Panel Gear	9319293004	
52	Gear Case	9318903003	
53	Switch Case	9319332000	
54	Grille Key Top	9319334004	
55	Micro Switch	9900625009	
56	Display Assy	9708823010	
57	Indicator PCB	9708824017	
--	Thermistor Assy	9900627003	

INDOOR UNIT
COMPACT WALL MOUNTED
ASTG09LUCA
ASTG14LUCA
Casing assy

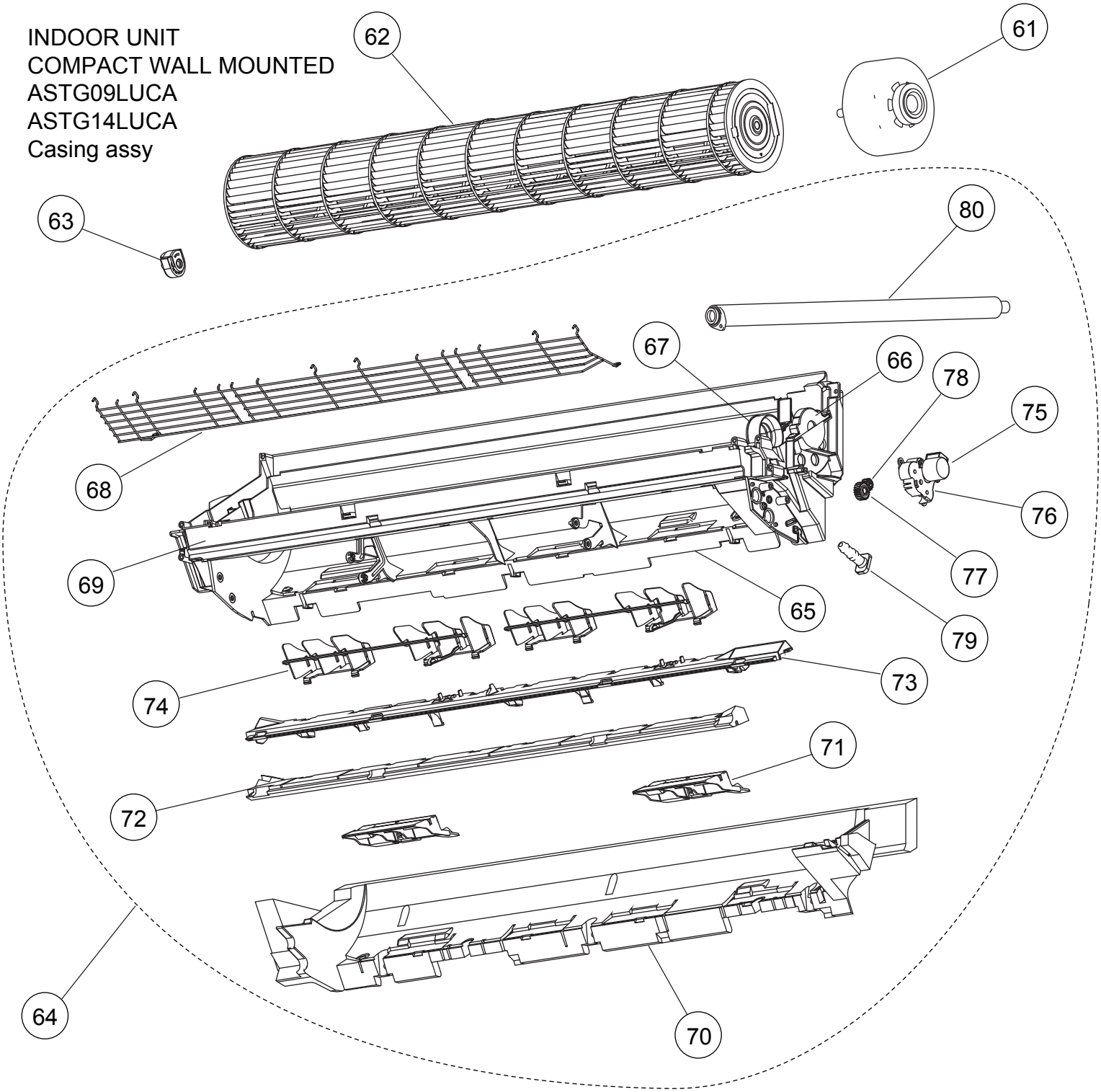

Ref.	Description	Part number	
61	Fan Motor	9602947003	
62	Crossflow Fan Assy	9319361000	
63	Bearing C Assy	9306628017	
64	Casing Assy	9319342009	
65	Casing	9318873009	
66	Motor Cover	9316601000	
67	Motor Cover	9318888003	
68	Fan Guard	9318924008	
69	Casing Cover F	9318923001	
70	Casing Cover B	9318920000	

Ref.	Description	Part number	
71	Pipe Bracket	9318889000	
72	Panel Cover	9319296005	
73	Louver Holder	9318886009	
74	R and L Louver	9318885002	
75	Motor Step	9900384128	
76	Louver Gear Holder	9318905007	
77	Louver Gear	9318904000	
78	Gear A	9309994003	
79	Drain Cap	9316177017	
80	Drain Hose Assy	9316904002	

INDOOR UNIT
WALL MOUNTED
ASTG18LFCA
ASTG24LFCA
ASTG24LFCB

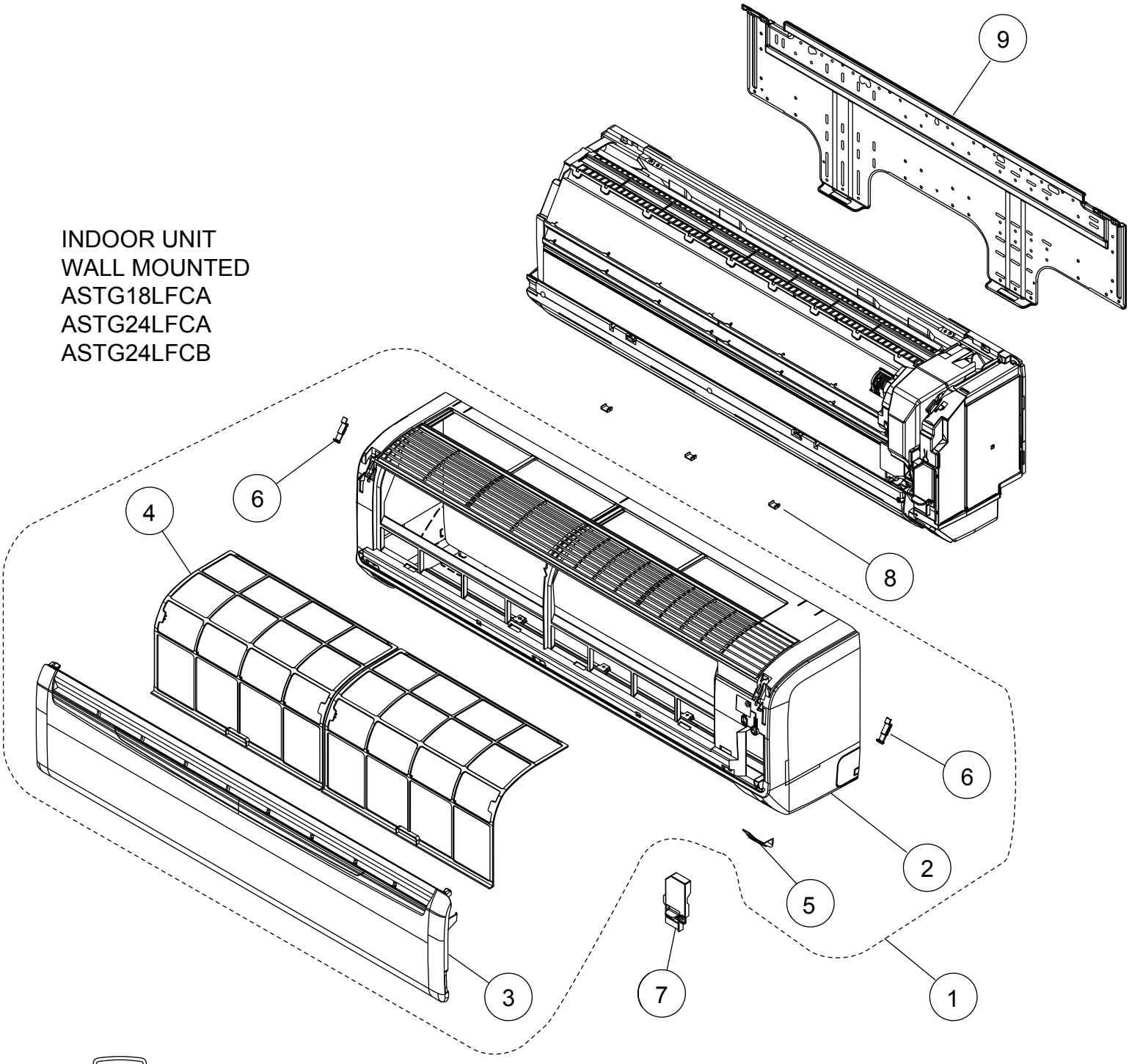

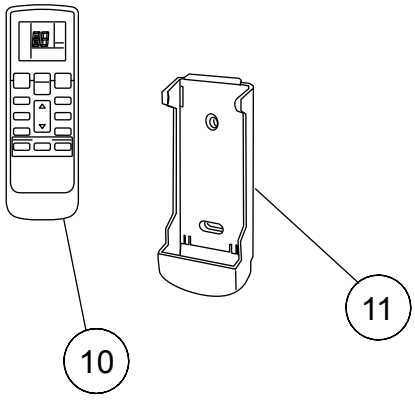

Ref	Description	Parts number	
1	Front Panel Total Assy	9318738001	
2	Front Panel	9314991080	
3	Intake Grille Assy	9385985049	
4	Air Filter	9315014016	
5	Receiver Window	9315010018	
6	Clamper Grille	9306755010	
7	Wire Clamper	9315015013	
8	Cap (Screw)	9309002050	
9	Bracket Panel	9315023018	
10	Remote Control	9379219037	
11	Remote Control Holder	9305642045	
--	Air Clean Filter Assy	9315212016	

INDOOR UNIT
WALL MOUNTED
ASTG18LFCA
ASTG24LFCA
ASTG24LFCB

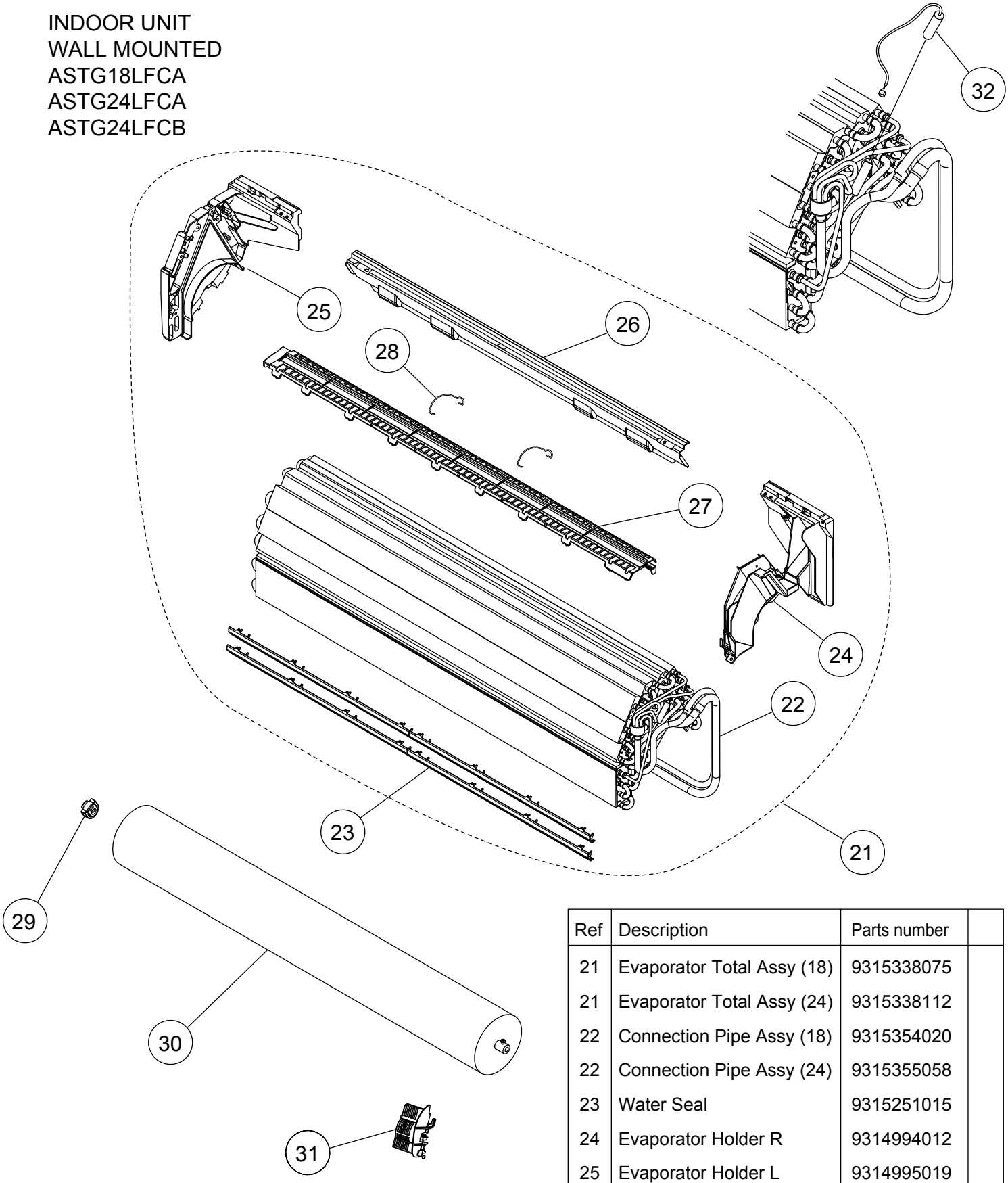

Ref	Description	Parts number	
21	Evaporator Total Assy (18)	9315338075	
21	Evaporator Total Assy (24)	9315338112	
22	Connection Pipe Assy (18)	9315354020	
22	Connection Pipe Assy (24)	9315355058	
23	Water Seal	9315251015	
24	Evaporator Holder R	9314994012	
25	Evaporator Holder L	9314995019	
26	Rear Bracket	9315022011	
27	Filter Guide	9315013019	
28	Filter Guard	9315411013	
29	Bearing C Assy	9306628017	
30	Crossflow Fan Assy	9315024015	
31	Holder (Room Thermistor)	9315252012	
32	Pipe Thermistor	9900551018	

INDOOR UNIT
WALL MOUNTED
ASTG18LFCA
ASTG24LFCA
ASTG24LFCB

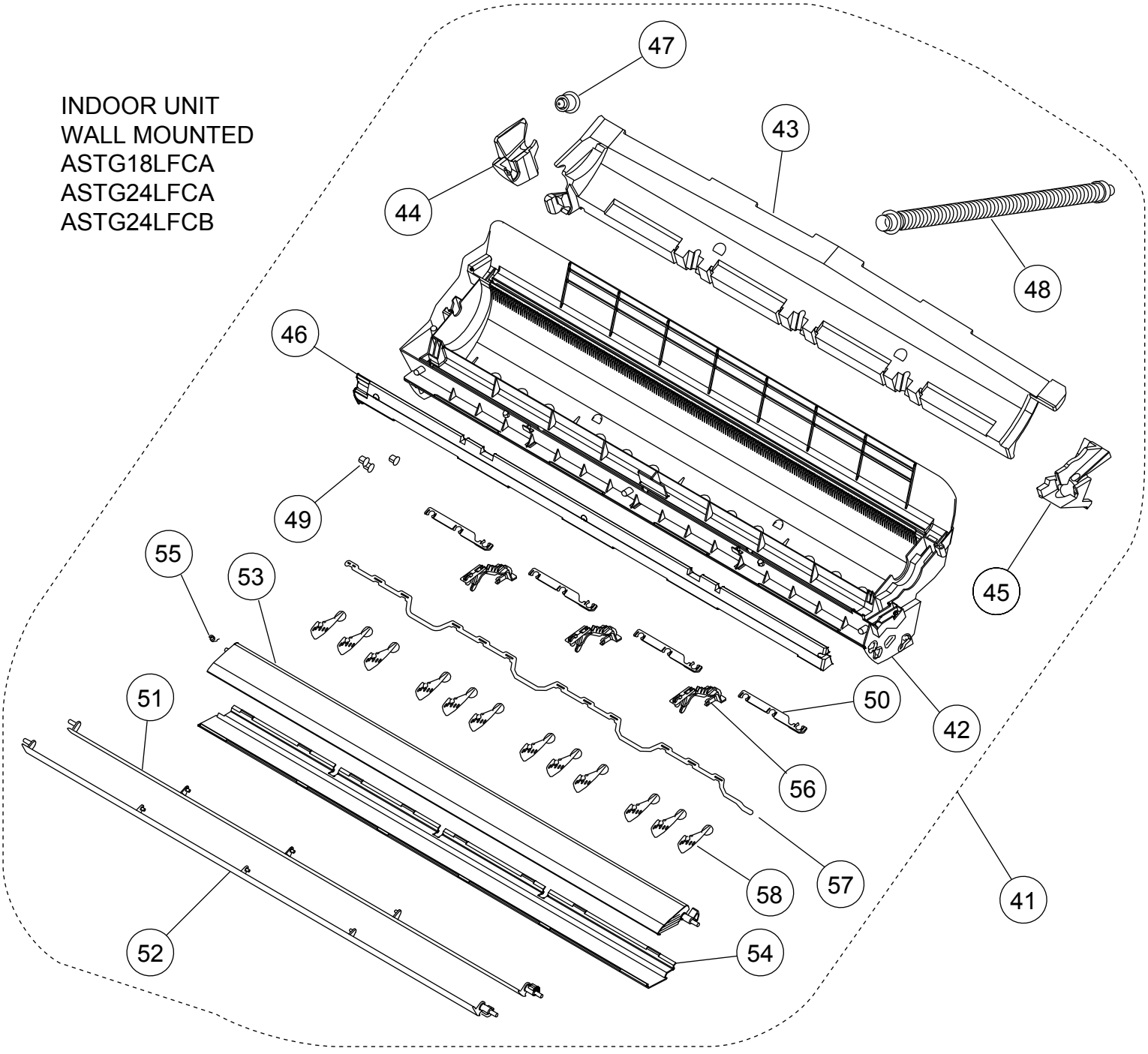

Ref	Description	Parts number	
41	Casing Assy (18)	9315331038	
41	Casing Assy (24)	9315331045	
42	Casing	9314993015	
43	Casing Cover B	9315016010	
44	Casing Cover L	9315017017	
45	Casing Cover R	9315018014	
46	Casing Cover F	9315019011	
47	Drain Cap	9367677009	
48	Drain Hose Assy	9315769015	
49	Bush B	9312156016	
50	Spacer B	9312441013	

Ref	Description	Parts number	
51	Louver U	9315000019	
52	Louver Z	9315001016	
53	Diffuser U	9315002013	
54	Diffuser Z	9315003010	
55	Spring C	9314142017	
56	Piller A	9315009012	
57	Joint B	9315006011	
58	R and L Louver	9311997016	
-	Fan Guard	9305751051	
-	Fan Guard Holder Right	9315814012	
-	Fan Guard Holder Left	9315815019	

INDOOR UNIT
WALL MOUNTED
ASTG18LFCA
ASTG24LFCA
ASTG24LFCB

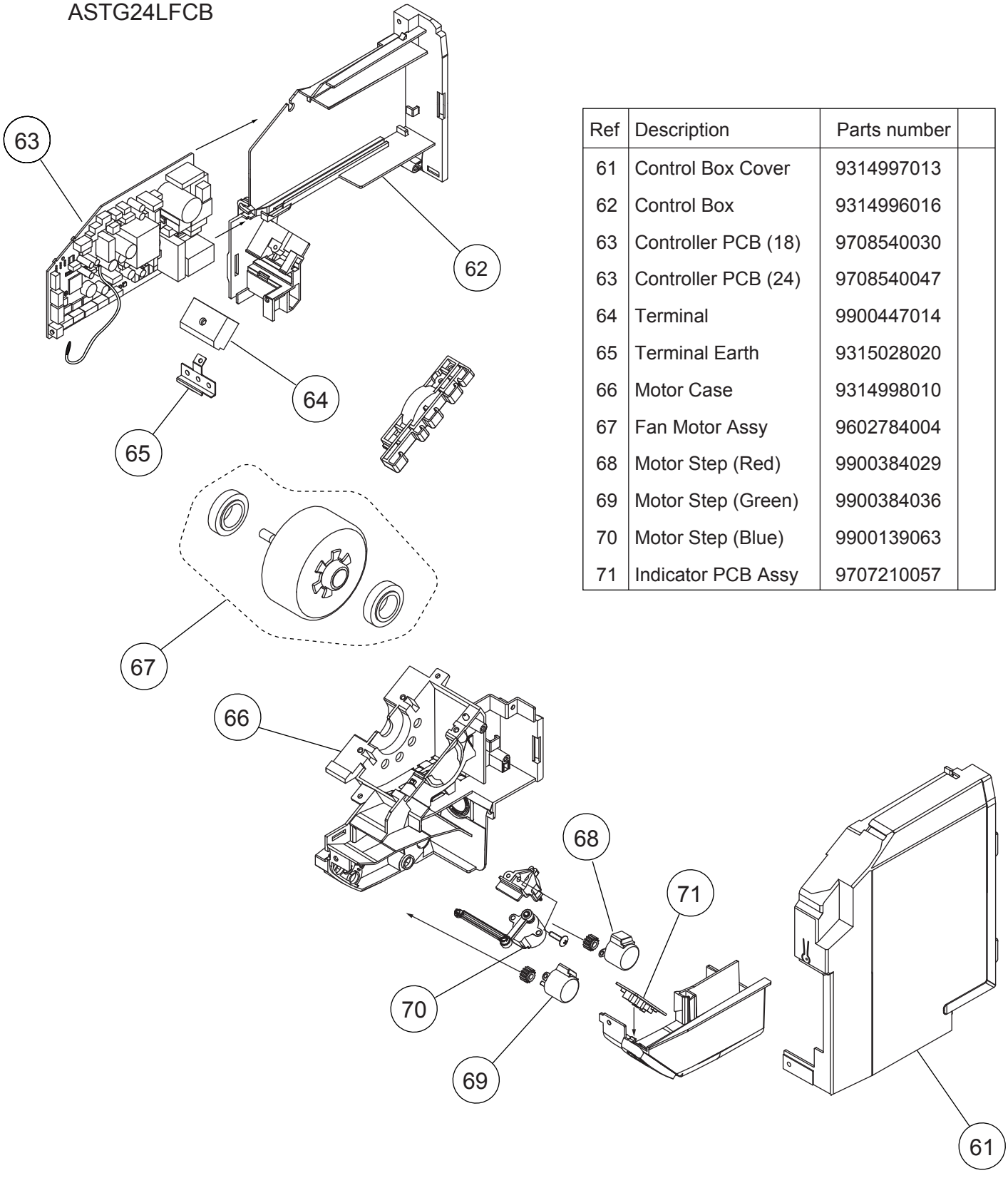

Ref	Description	Parts number	
61	Control Box Cover	9314997013	
62	Control Box	9314996016	
63	Controller PCB (18)	9708540030	
63	Controller PCB (24)	9708540047	
64	Terminal	9900447014	
65	Terminal Earth	9315028020	
66	Motor Case	9314998010	
67	Fan Motor Assy	9602784004	
68	Motor Step (Red)	9900384029	
69	Motor Step (Green)	9900384036	
70	Motor Step (Blue)	9900139063	
71	Indicator PCB Assy	9707210057	

DECORATION PANEL
UTG-UFYD-W

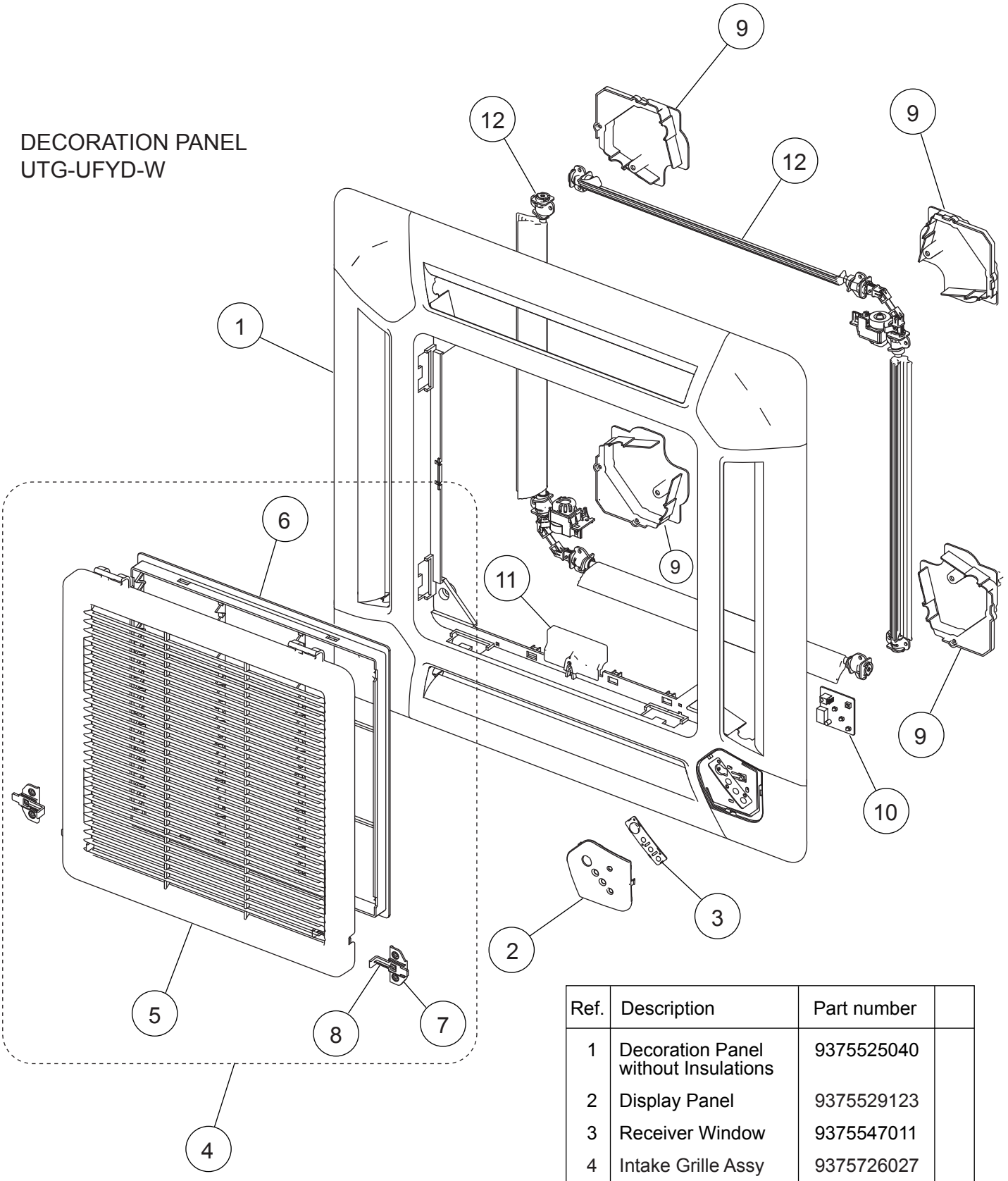

Ref.	Description	Part number	
1	Decoration Panel without Insulations	9375525040	
2	Display Panel	9375529123	
3	Receiver Window	9375547011	
4	Intake Grille Assy	9375726027	
5	Intake Grille	9375531027	
6	Long Life Filter	9375533014	
7	Hook Bracket	9375546014	
8	Grille Hook	9375532024	
9	Panel Cover without Insulations	9375530013	
10	Indicator PCB Assy	9707371031	
11	Connector Cover	9375549015	
12	Flap Total Assy	9377760029	

DECORATION PANEL
UTG-UFYD-W

Flap total assy
Motor holder assy

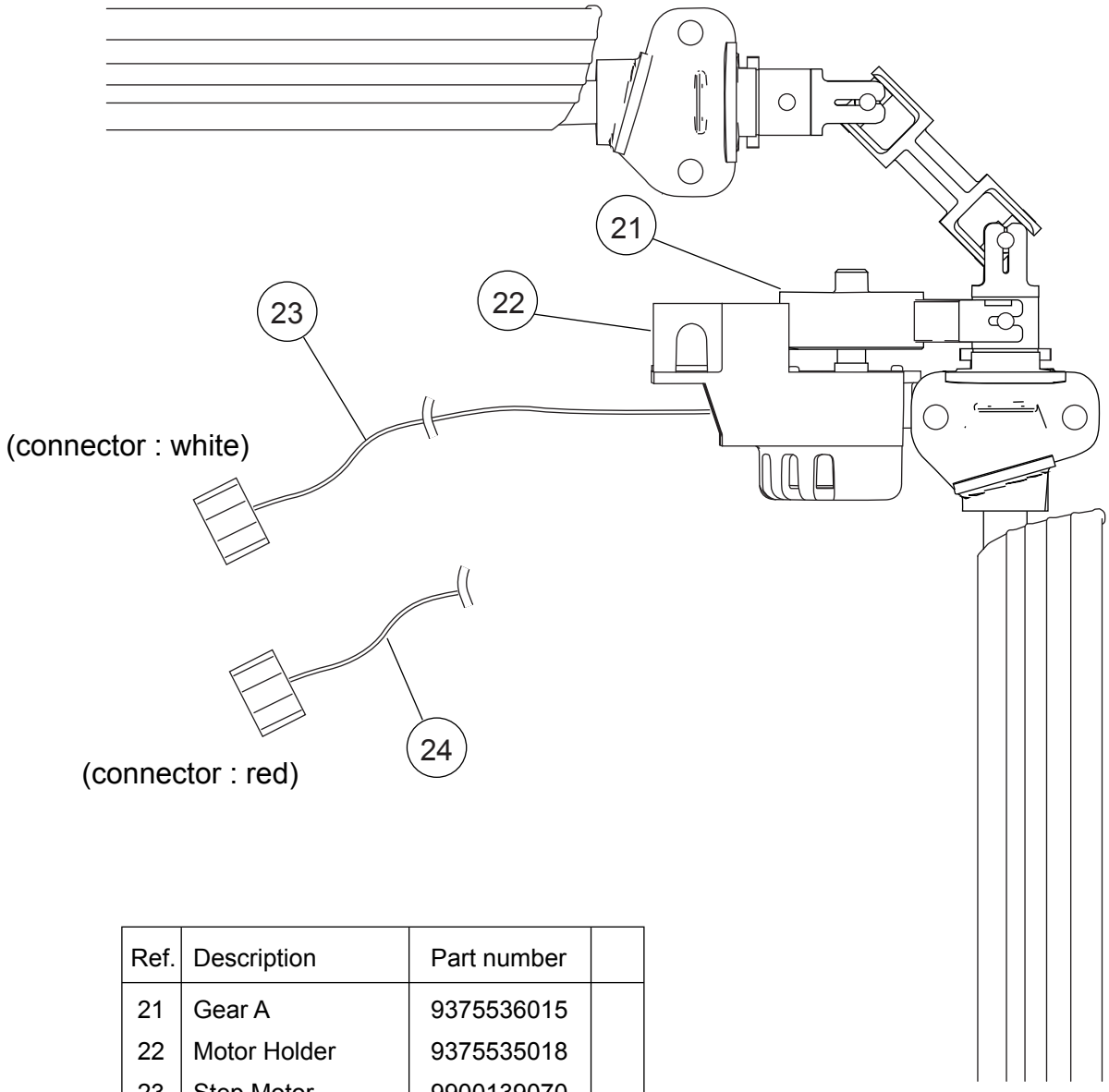

Ref.	Description	Part number	
21	Gear A	9375536015	
22	Motor Holder	9375535018	
23	Step Motor (white connector)	9900139070	
24	Step Motor (red connector)	9900139087	

INDOOR UNIT
COMPACT CASSETTE
AUTG09LVLA
AUTG12LVLA
AUTG18LVLA

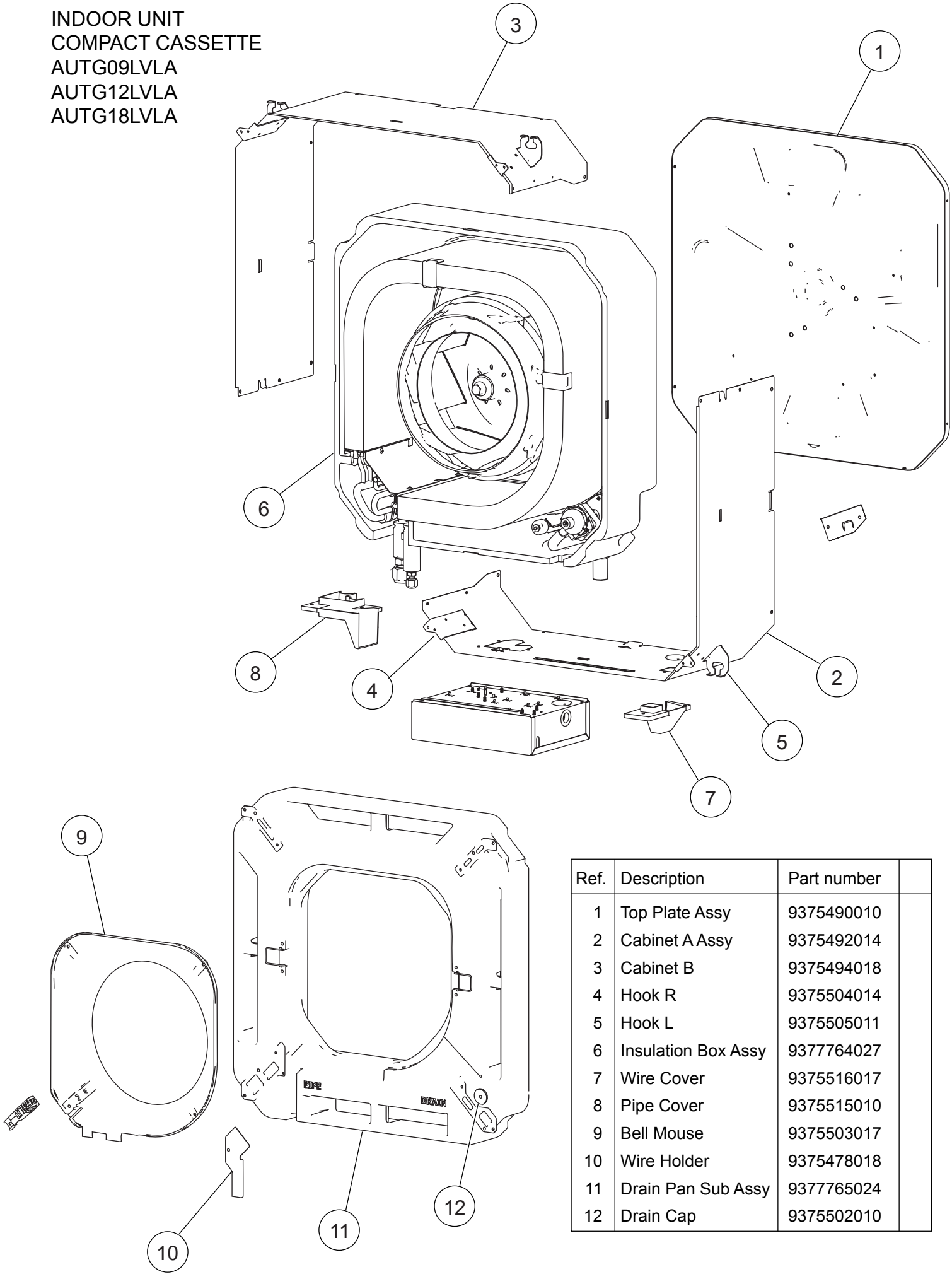

Ref.	Description	Part number	
1	Top Plate Assy	9375490010	
2	Cabinet A Assy	9375492014	
3	Cabinet B	9375494018	
4	Hook R	9375504014	
5	Hook L	9375505011	
6	Insulation Box Assy	9377764027	
7	Wire Cover	9375516017	
8	Pipe Cover	9375515010	
9	Bell Mouse	9375503017	
10	Wire Holder	9375478018	
11	Drain Pan Sub Assy	9377765024	
12	Drain Cap	9375502010	

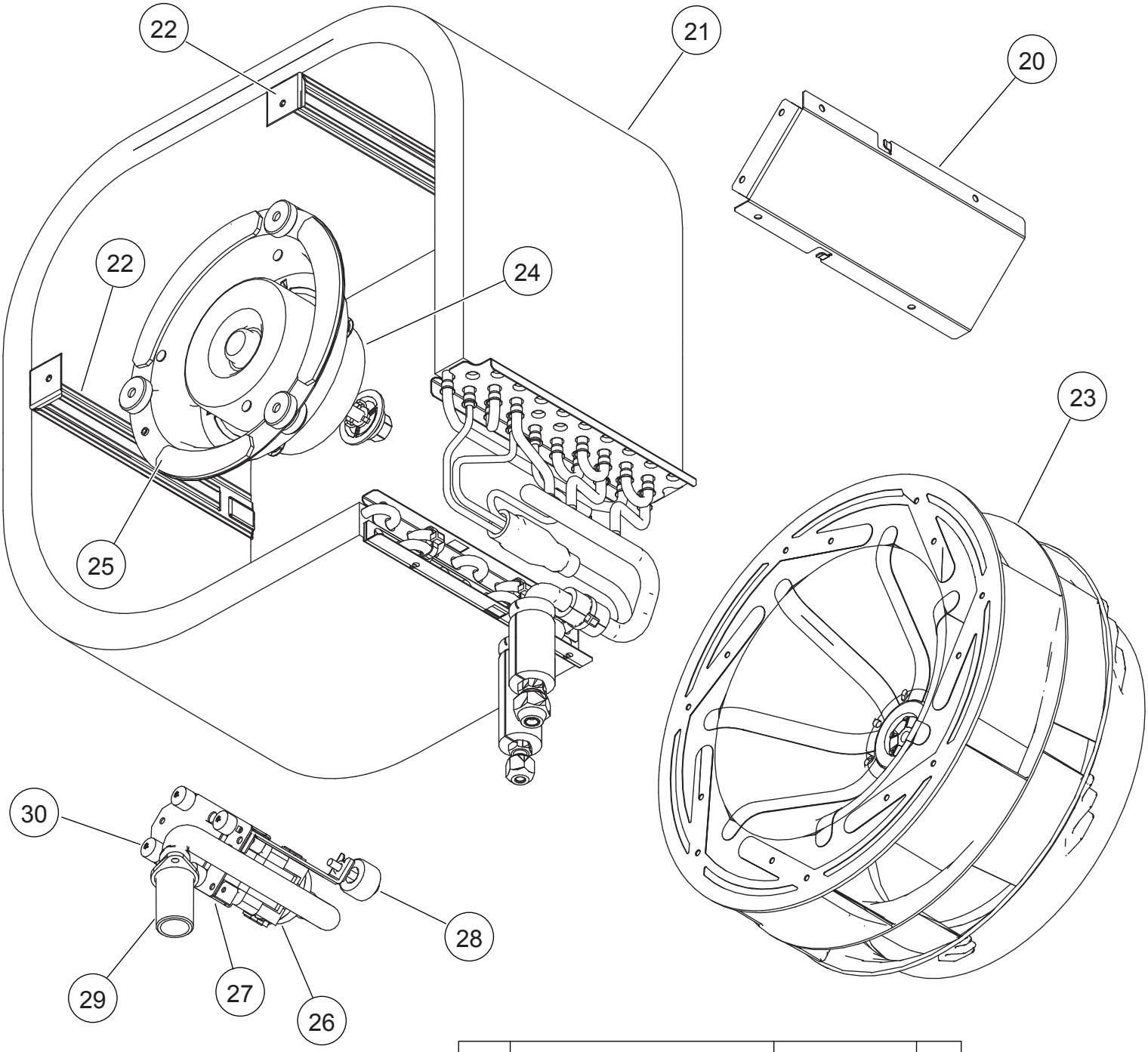

INDOOR UNIT
COMPACT CASSETTE
AUTG09LVLA
AUTG12LVLA
AUTG18LVLA

Ref.	Description	Part number	
20	Separate Wall	9375506018	
21	Evaporator Total Assy (09, 12)	9375720032	
21	Evaporator Total Assy (18)	9375720070	
22	Evaporator Holder	9375508012	
23	2 Stage Turbo Fan Assy	9375480011	
24	Fan Motor	9602436019	
25	Fan Motor Holder	9375552015	
26	Pump Assy	9900472030	
27	Drain Pump Holder B	9375518011	
28	Float Switch	9900361037	
29	Drain Port Sub Assy	9375718015	
30	Rubber (Pump)	9378426016	

INDOOR UNIT
COMPACT CASSETTE
AUTG09LVLA
AUTG12LVLA
AUTG18LVLA
Control unit

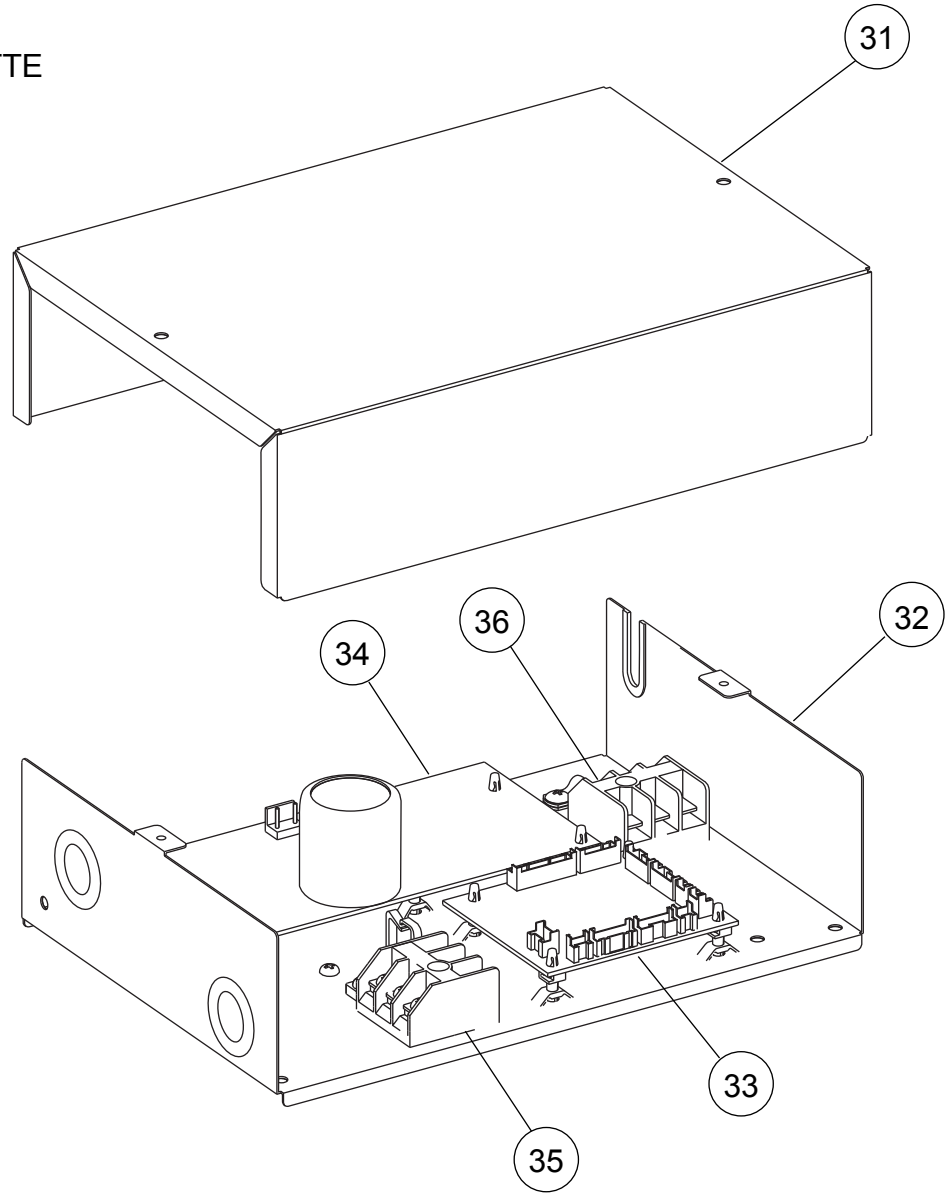

Ref.	Description	Part number	
31	Control Box Cover	9375512019	
32	Control Box A	9375511012	
33	Controller PCB Assy (09)	9707393743	
33	Controller PCB Assy (12)	9707393750	
33	Controller PCB Assy (18)	9707393774	
34	Power Supply PCB Assy	9707398250	
35	Terminal	9306489045	
36	Terminal	9703345012	
--	Pipe Thermistor	9703297014	
--	Room Thermistor	9900502003	
--	Remote	9379219006	
--	Remote Holder	9305642045	

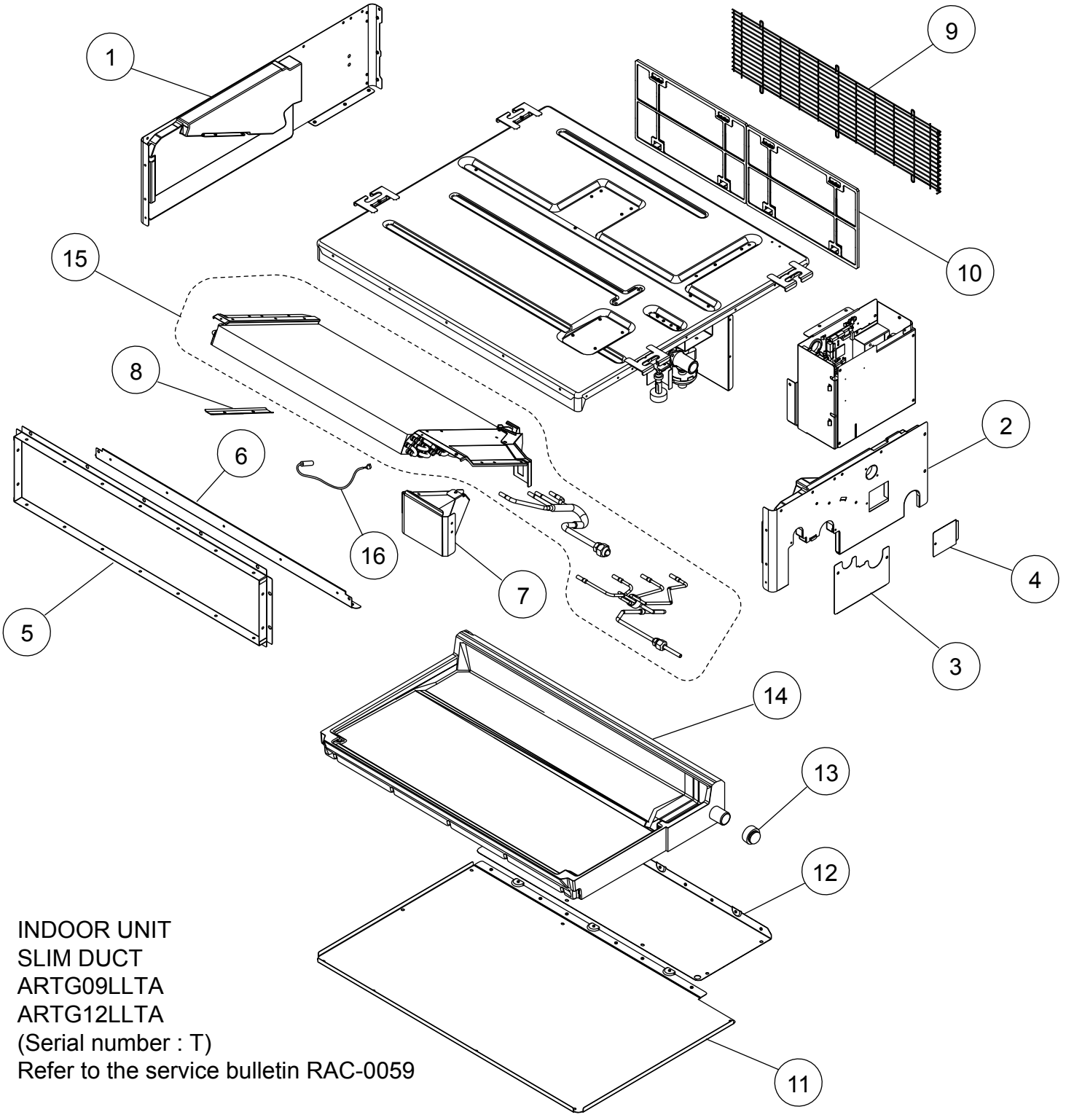

INDOOR UNIT
SLIM DUCT
ARTG09LLTA
ARTG12LLTA
(Serial number : T)
Refer to the service bulletin RAC-0059

Ref	Description	Parts number	
1	Side Panel R Sub Assy	9379906005	
2	Side Panel L Sub Assy	9379907002	
3	Pipe Panel Sub Assy	9379900003	
4	Panel (Window) Sub Assy	9379915007	
5	Outlet Frame Sub Assy	9379909006	
6	Front Panel (2 Fan)	9379593007	
7	Valve Cover Sub Assy	9379576000	
8	Cover Pipe Sub Assy	9380033004	
9	Fan Guard (2 Fan)	9379637008	

Ref	Description	Parts number	
10	Air Filter	9379574006	
11	Main Panel Sub Assy	9379902007	
12	Cabinet Panel (2 Fan)	9379596008	
13	Drain Cap	9358746004	
14	Drain Pan Sub Assy	9379901000	
15	Evaporater Total Assy	9364499581	
16	Pipe Thermistor	9900498085	
--	Hose Sub Assy	9378450103	

INDOOR UNIT
SLIM DUCT
ARTG09LLTA
ARTG12LLTA
(Serial number : T)

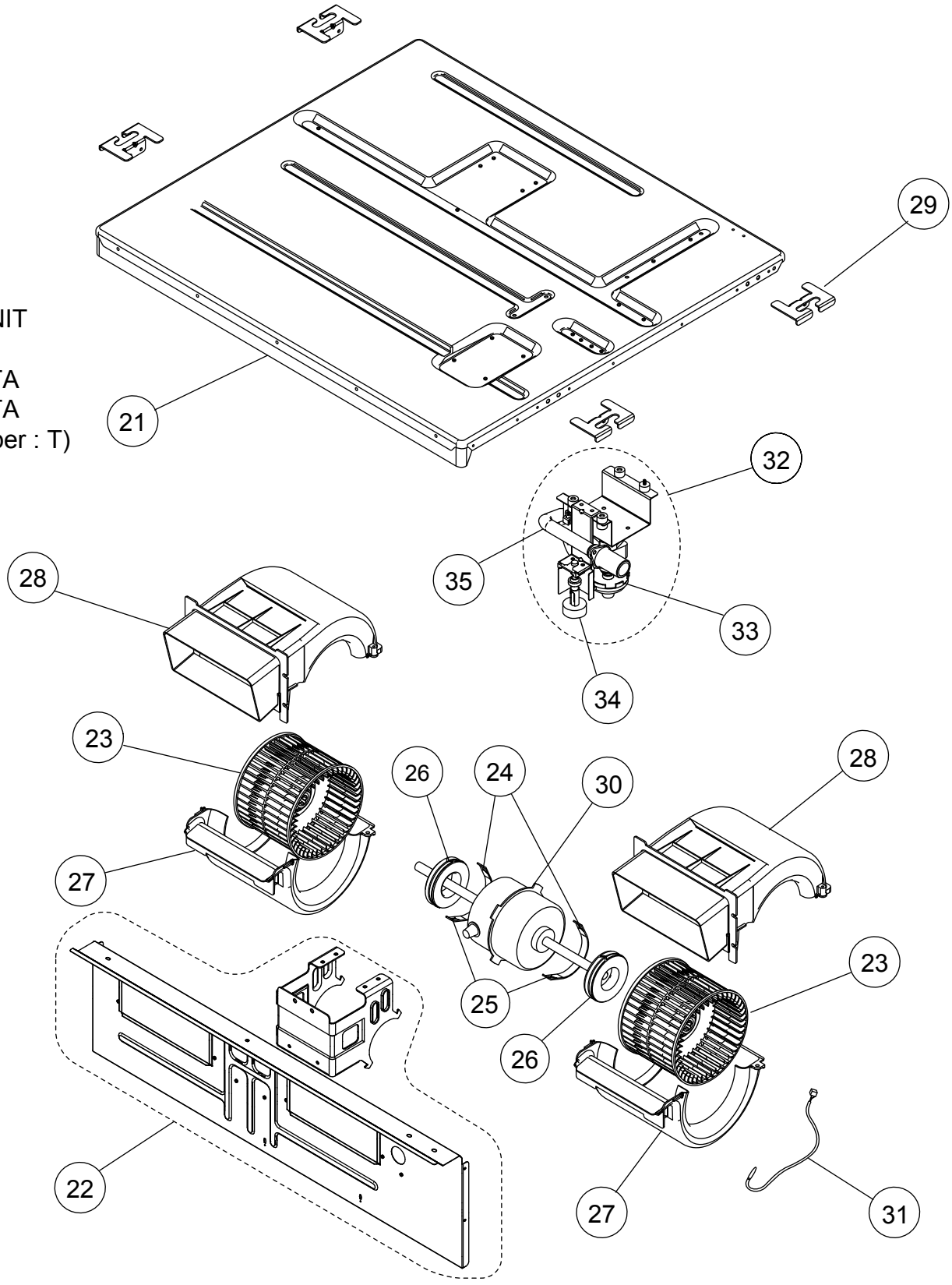

Ref	Description	Parts number	
21	Top Panel Sub Assy	9379908009	
22	Separator Sub Assy	9379898003	
23	Sirroco Fan Assy	9379570015	
24	Motor Band Assy	9379613002	
25	Motor Band	9379614009	
26	Rubber (Vibration Proof)	9379644006	
27	Casing B	9379572002	
28	Casing U	9379571005	

Ref	Description	Parts number	
29	Hook Metal	9379889001	
30	Fan Motor Assy	9602967018	
31	Room Thermistor	9703299247	
32	Drain Pump Sub Assy	9379914000	
33	Pump Assy	9900472047	
34	Float Switch	9900465032	
35	Drain Hose Assy	9379913003	

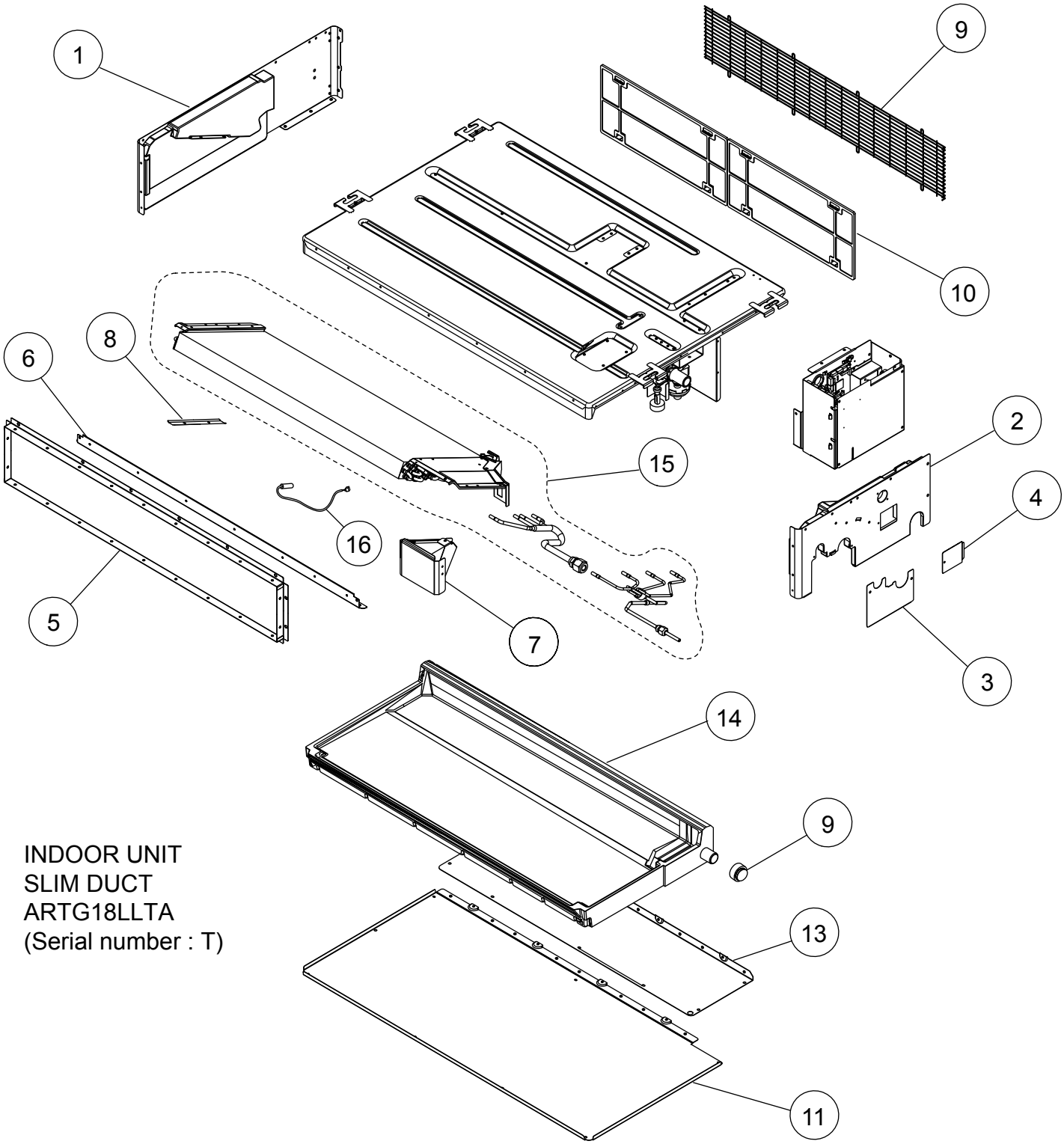

INDOOR UNIT
SLIM DUCT
ARTG18LLTA
(Serial number : T)

Ref	Description	Parts number	
1	Side Panel R Sub Assy	9379906005	
2	Side Panel L Sub Assy	9379907002	
3	Pipe Panel Sub Assy	9379900003	
4	Panel (Window) Sub Assy	9379915007	
5	Outlet Frame Sub Assy	9379909013	
6	Front Panel (3 Fan)	9379594004	
7	Valve Cover Sub Assy	9379576000	
8	Cover Pipe Sub Assy	9380033004	
9	Fan Guard (3 Fan)	9379638005	

Ref	Description	Parts number	
10	Air Filter	9379575003	
11	Main Panel Sub Assy	9379902014	
12	Cabinet Panel (3 Fan)	9379597005	
13	Drain Cap	9358746004	
14	Drain Pan Sub Assy	9379901017	
15	Evaporator Total Assy	9364499604	
16	Pipe Thermistor	9900498085	
--	Hose Sub Assy	9378450103	

INDOOR UNIT
SLIM DUCT
ARTG18LLTA
(Serial number : T)

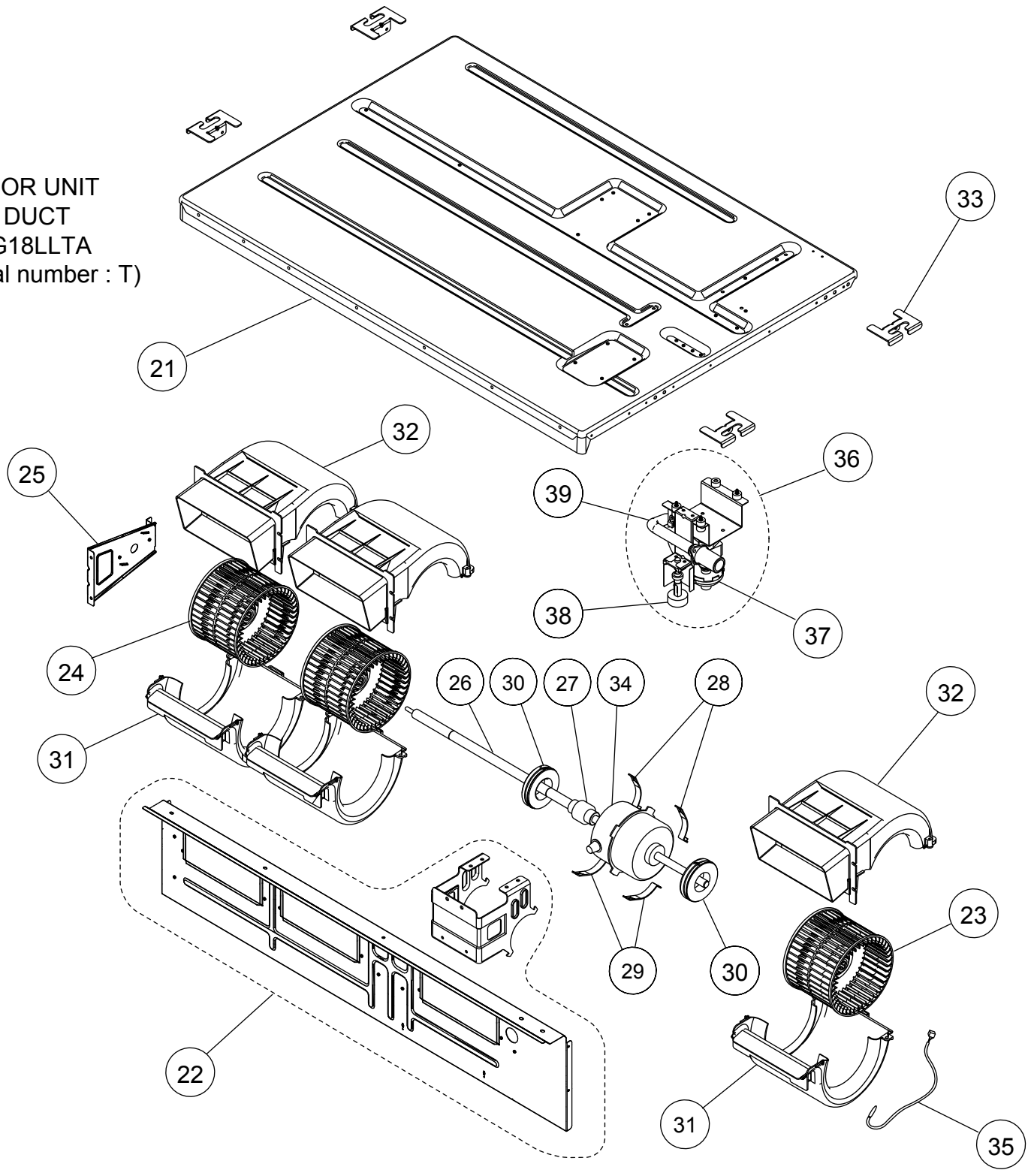

Ref	Description	Parts number	
21	Top Panel Sub Assy	9379908016	
22	Separator Sub Assy	9379898010	
23	Sirroco Fan Assy	9379570022	
24	Sirroco Fan Assy	9379570039	
25	Bracket (Bearing Sub Assy)	9379627009	
26	Shaft Assy	9379805001	
27	Joint Assy	9378038011	
28	Motor Band Assy	9379613002	
29	Motor Band	9379614009	
30	Rubber (Vibration Proof)	9379644006	

Ref	Description	Parts number	
31	Casing B	9379572002	
32	Casing U	9379571005	
33	Hook Metal	9379889001	
34	Fan Motor Assy	9602968015	
35	Thermistor (Room)	9703299247	
36	Drain Pump Sub Assy	9379914000	
37	Pump Assy	9900472047	
38	Float Switch	9900465032	
39	Drain Hose Assy	9379913003	

INDOOR UNIT
SLIM DUCT
ARTG09LLTA
ARTG12LLTA
ARTG18LLTA
(Serial number : T)

Ref	Description	Parts number	
41	Control Cover Sub Assy	9379806039	
42	Control Box Assy	9380041023	
43	PCB Holder	9379402002	
44	Power Supply PCB	9707398267	
45	Controller PCB (09)	9707393798	
45	Controller PCB (12)	9707393804	
45	Controller PCB (18)	9707393828	
46	Reactor Assy	9707457018	
47	Terminal 3P	9306489045	
48	Terminal 3P (Wired Remote)	9703345012	
49	Terminal Bracket	9380132011	
--	Wired Remote Control	9318593013	

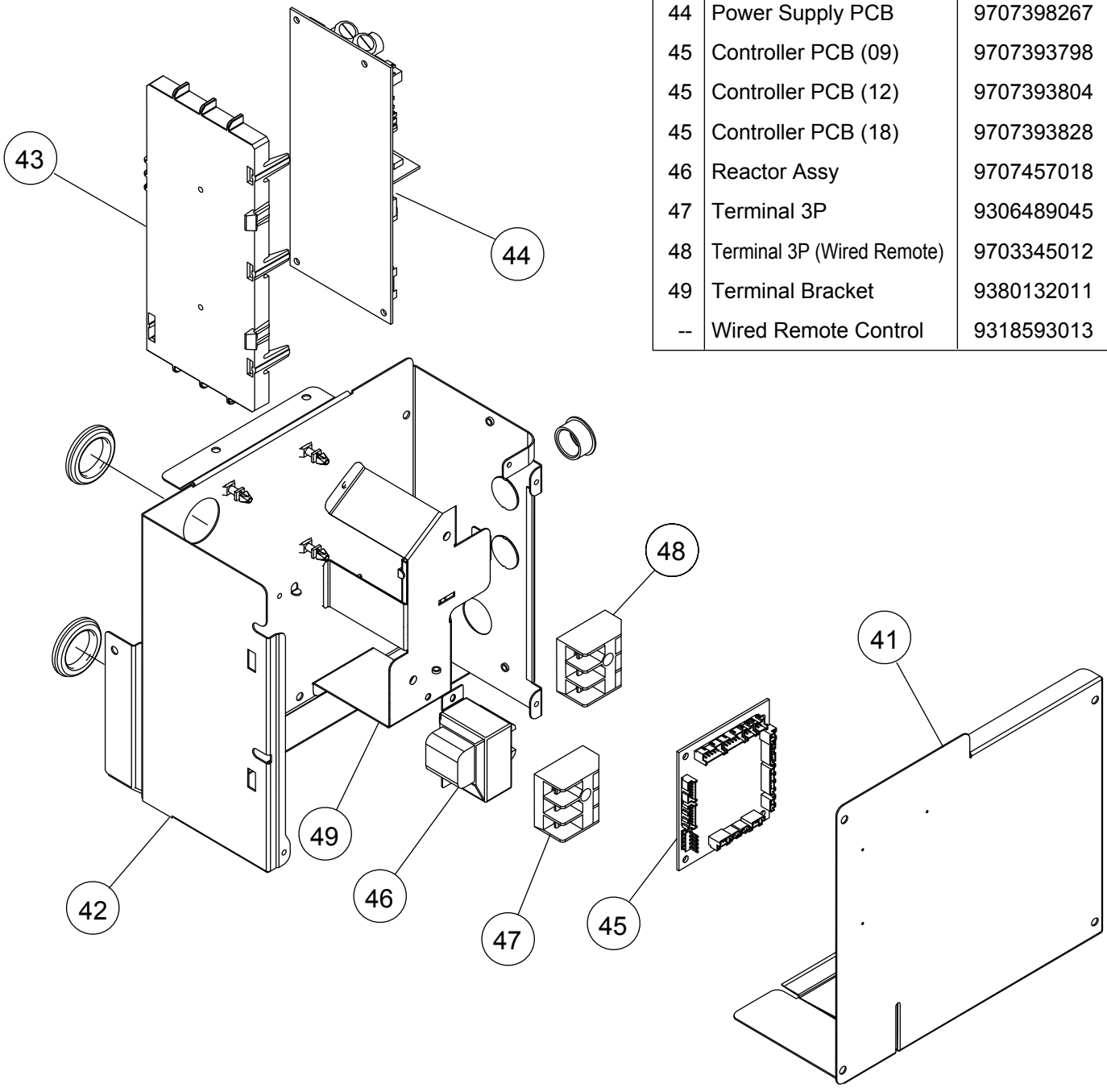

INDOOR UNIT
SLIM DUCT
ARTG09LLTA
ARTG12LLTA
(Serial number : R)
Refer to the service bulletin RAC-0059

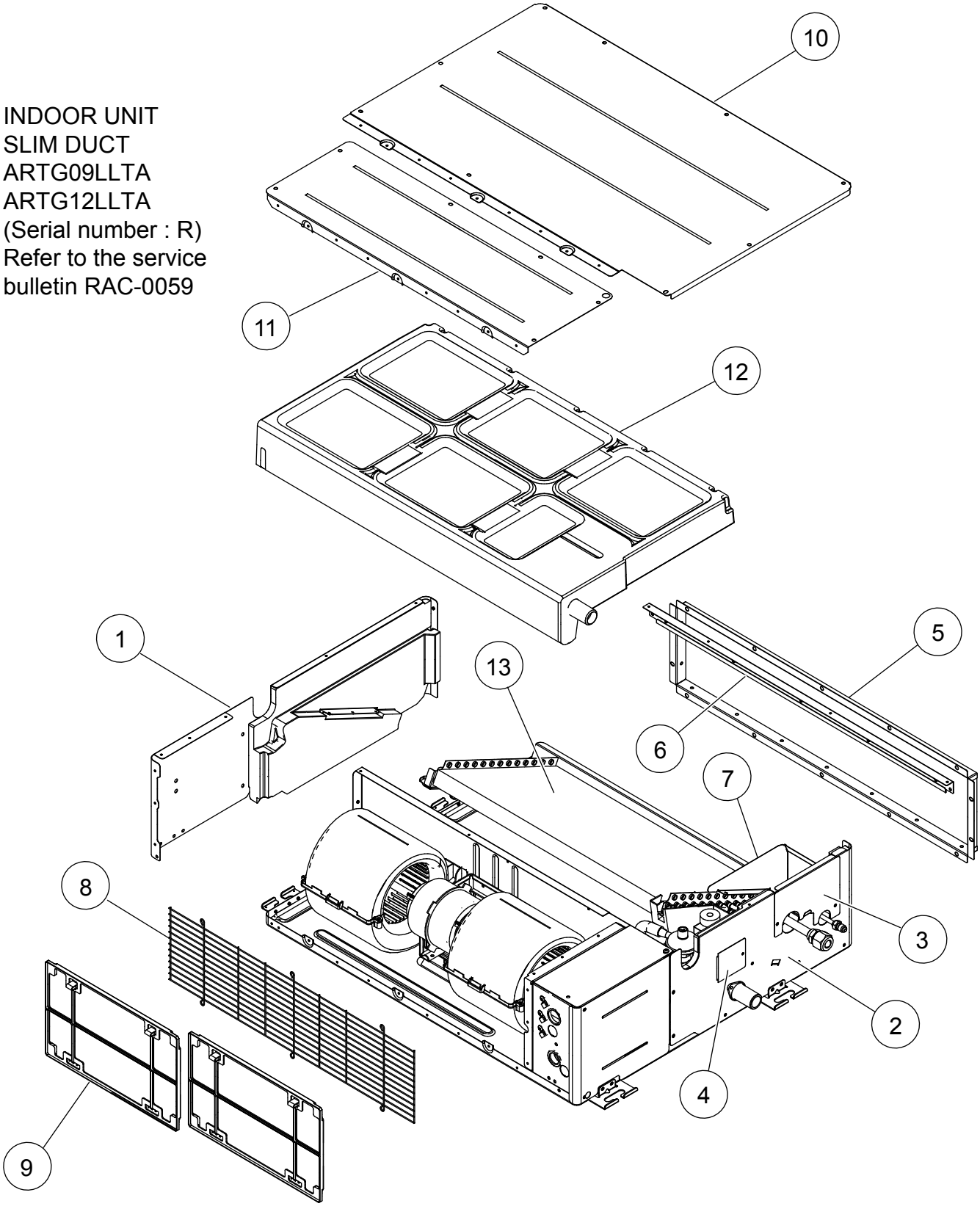

Ref	Description	Parts number	
1	Side Panel R Sub Assy	9379906012	
2	Side Panel L Sub Assy	9379907019	
3	Pipe Panel Sub Assy	9379900003	
4	Panel (Window) Sub Assy	9379915007	
5	Outlet Frame Assy	9380042006	
6	Front Panel (2 Fan)	9380594000	
7	Valve Cover Sub Assy	9379576017	

Ref	Description	Parts number	
8	Fan Guard (2 Fan)	9380589006	
9	Air Filter	9379574006	
10	Main Panel (2 Fan)	9380602002	
11	Cabinet Panel (2 Fan)	9380597001	
12	Drain Pan Sub Assy	9379901048	
13	Evaporater Total Assy	9380682042	

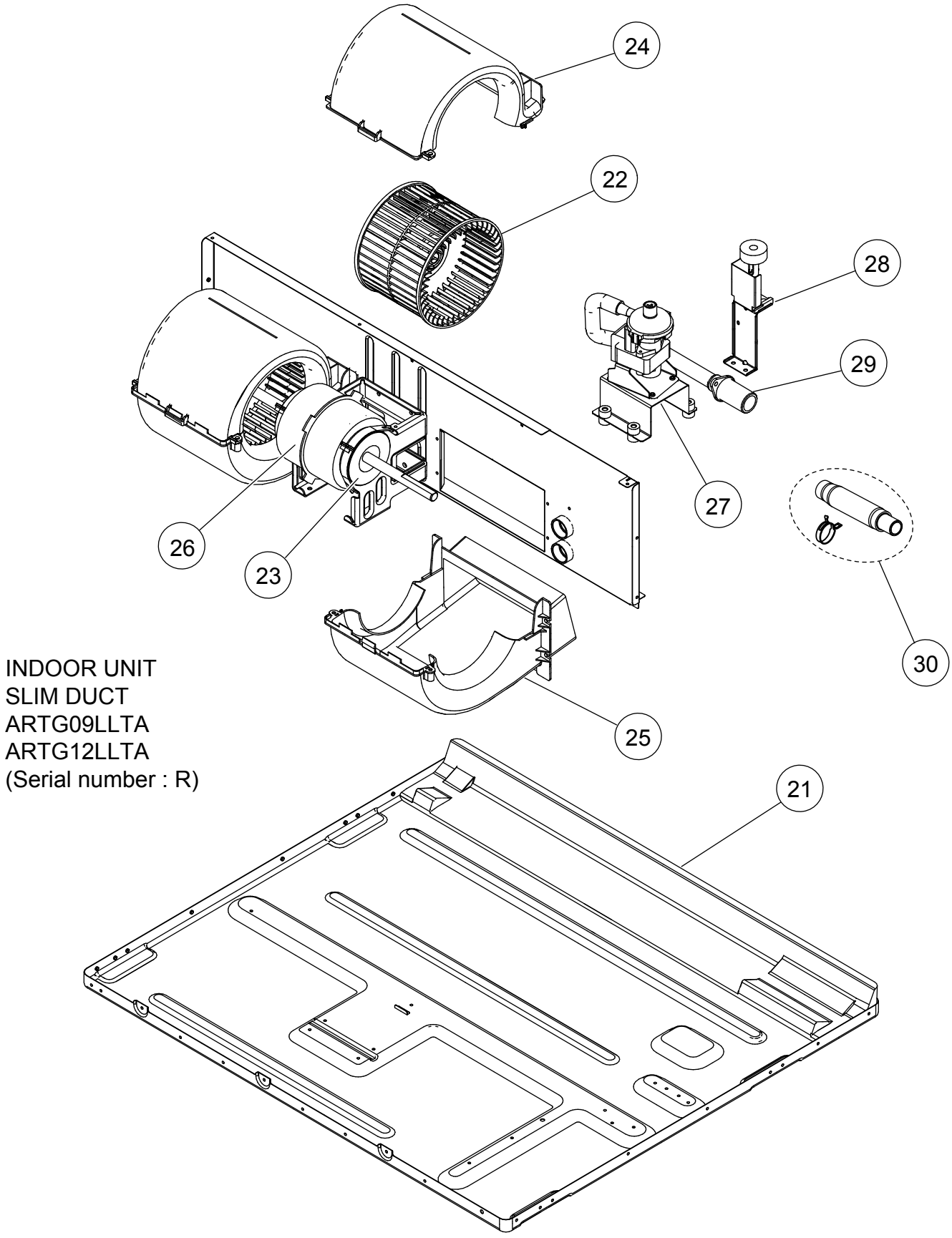

INDOOR UNIT
SLIM DUCT
ARTG09LLTA
ARTG12LLTA
(Serial number : R)

Ref	Description	Parts number	
21	Top Panel Sub Assy	9379908030	
22	Sirroco Fan Assy	9379570015	
23	Rubber (Vibration Proof)	9379644006	
24	Casing B	9379572002	
25	Casing U	9379571005	

Ref	Description	Parts number	
26	Fan Motor Assy	9602967025	
27	Drain Pump Sub Assy	9379914024	
28	Float Switch Sub Assy	9378593022	
29	Drain Hose Assy	9379913003	
30	Hose Sub Assy	9378450097	

INDOOR UNIT
SLIM DUCT
ARTG18LLTA
(Serial number : R)

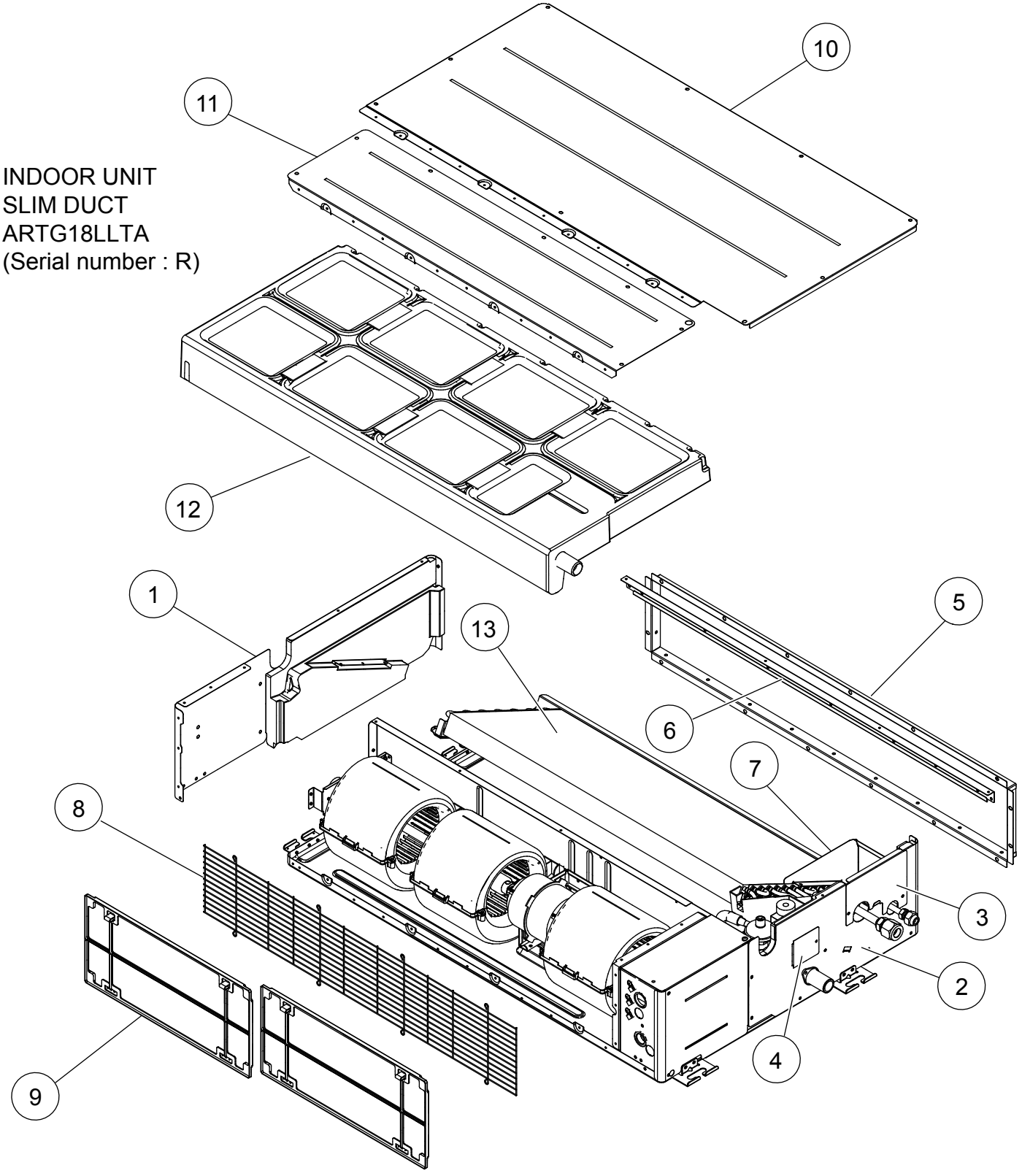

Ref	Description	Parts number	
1	Side Panel R Sub Assy	9379906012	
2	Side Panel L Sub Assy	9379907019	
3	Pipe Panel Sub Assy	9379900003	
4	Panel (Window) Sub Assy	9379915007	
5	Outlet Frame Assy	9380042013	
6	Front Panel (3 Fan)	9380595007	
7	Valve Cover Sub Assy	9379576017	

Ref	Description	Parts number	
8	Fan Guard (3 Fan)	9380590002	
9	Air Filter	9379575003	
10	Main Panel (3 Fan)	9380603009	
11	Cabinet Panel (3 Fan)	9380598008	
12	Drain Pan Sub Assy	9379901055	
13	Evaporator Total Assy	9380682066	

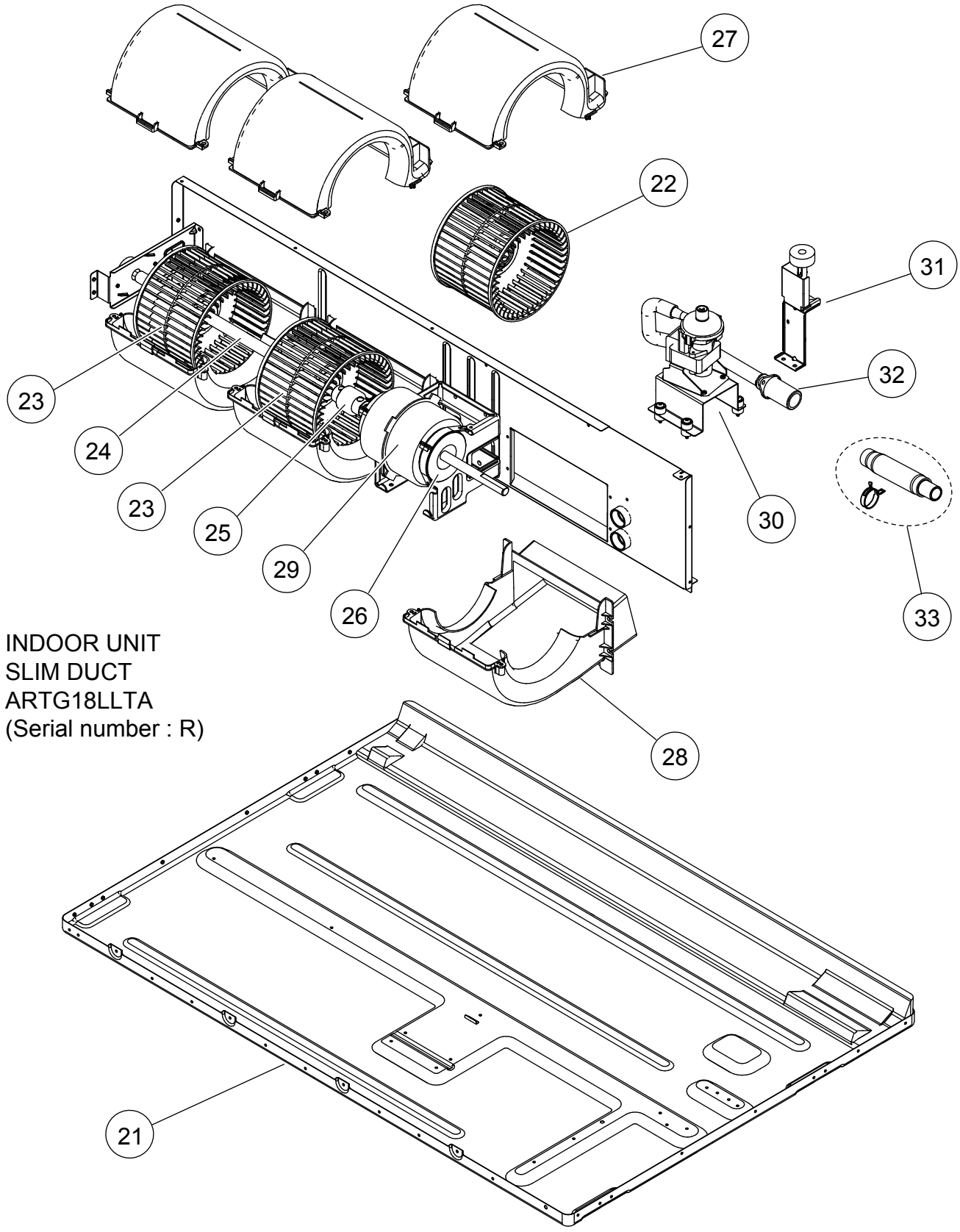

INDOOR UNIT
SLIM DUCT
ARTG18LLTA
(Serial number : R)

Ref	Description	Parts number	
21	Top Panel Sub Assy	9379908047	
22	Sirroco Fan Assy	9379570022	
23	Sirroco Fan Assy	9379570039	
24	Shaft	9380398004	
25	Joint Assy	9378038011	
26	Rubber (Vibration Proof)	9379644006	
27	Casing B	9379572002	

Ref	Description	Parts number	
28	Casing U	9379571005	
29	Fan Motor Assy	9602968022	
30	Drain Pump Sub Assy	9379914024	
31	Float Switch Sub Assy	9378593022	
32	Drain Hose Assy	9379913003	
33	Hose Sub Assy	9378450097	

INDOOR UNIT
SLIM DUCT
ARTG09LLTA
ARTG12LLTA
ARTG18LLTA
(Serial number : R)

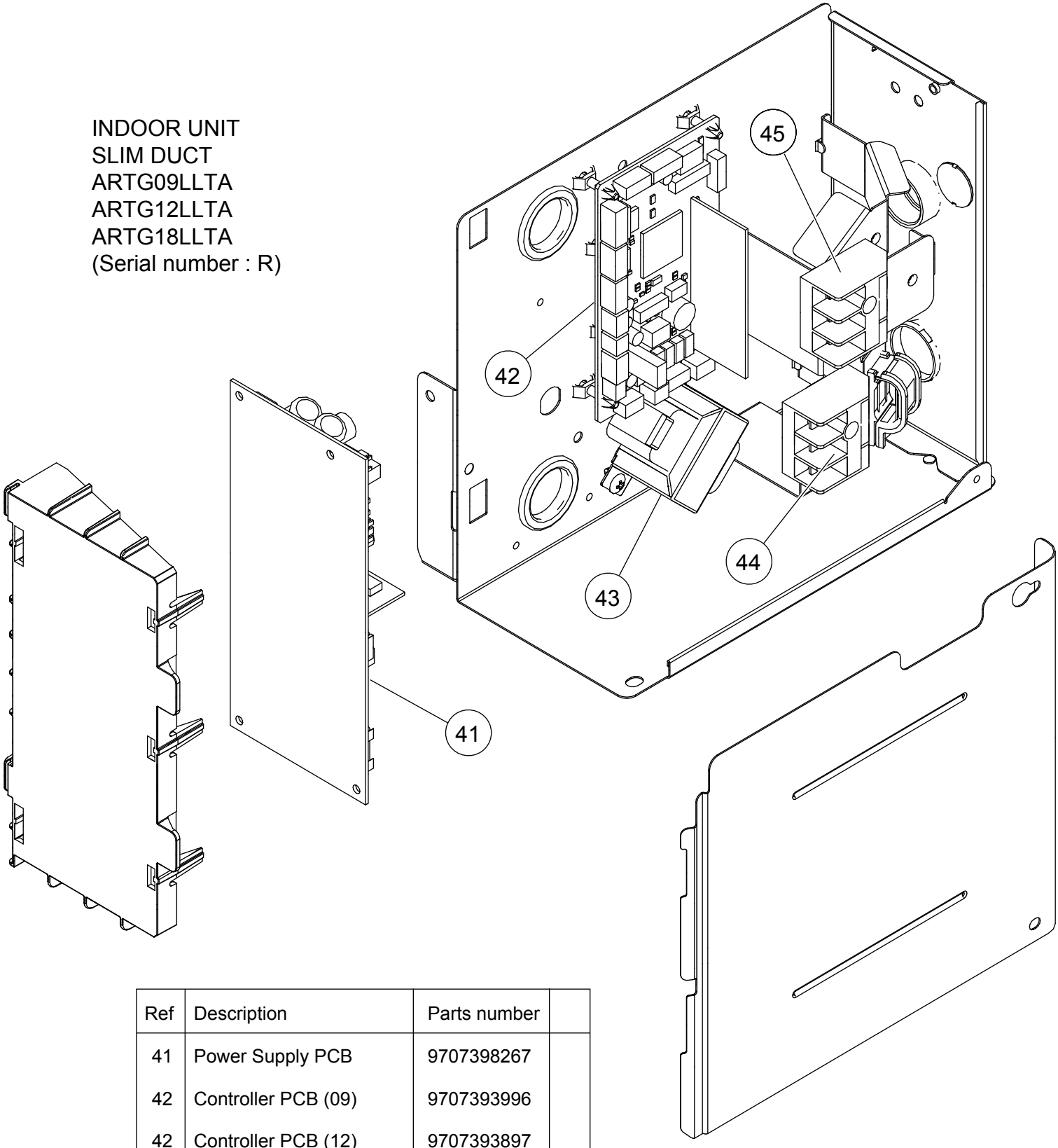

Ref	Description	Parts number	
41	Power Supply PCB	9707398267	
42	Controller PCB (09)	9707393996	
42	Controller PCB (12)	9707393897	
42	Controller PCB (18)	9707393910	
43	Reactor Assy	9707457018	
44	Terminal 3P	9306489045	
45	Terminal 3P (Wired Remote)	9703345012	
46	Wired Remote Control	9318593020	
--	Room Thermistor	9900653002	
--	Pipe Thermistor	9900498108	

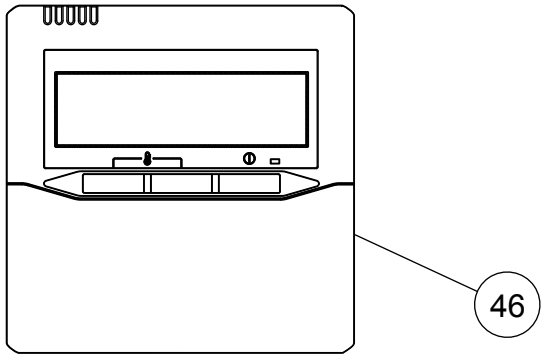

2012.02.28 add

INDOOR UNIT
FLOOR CEILING
ABTG18LVTA

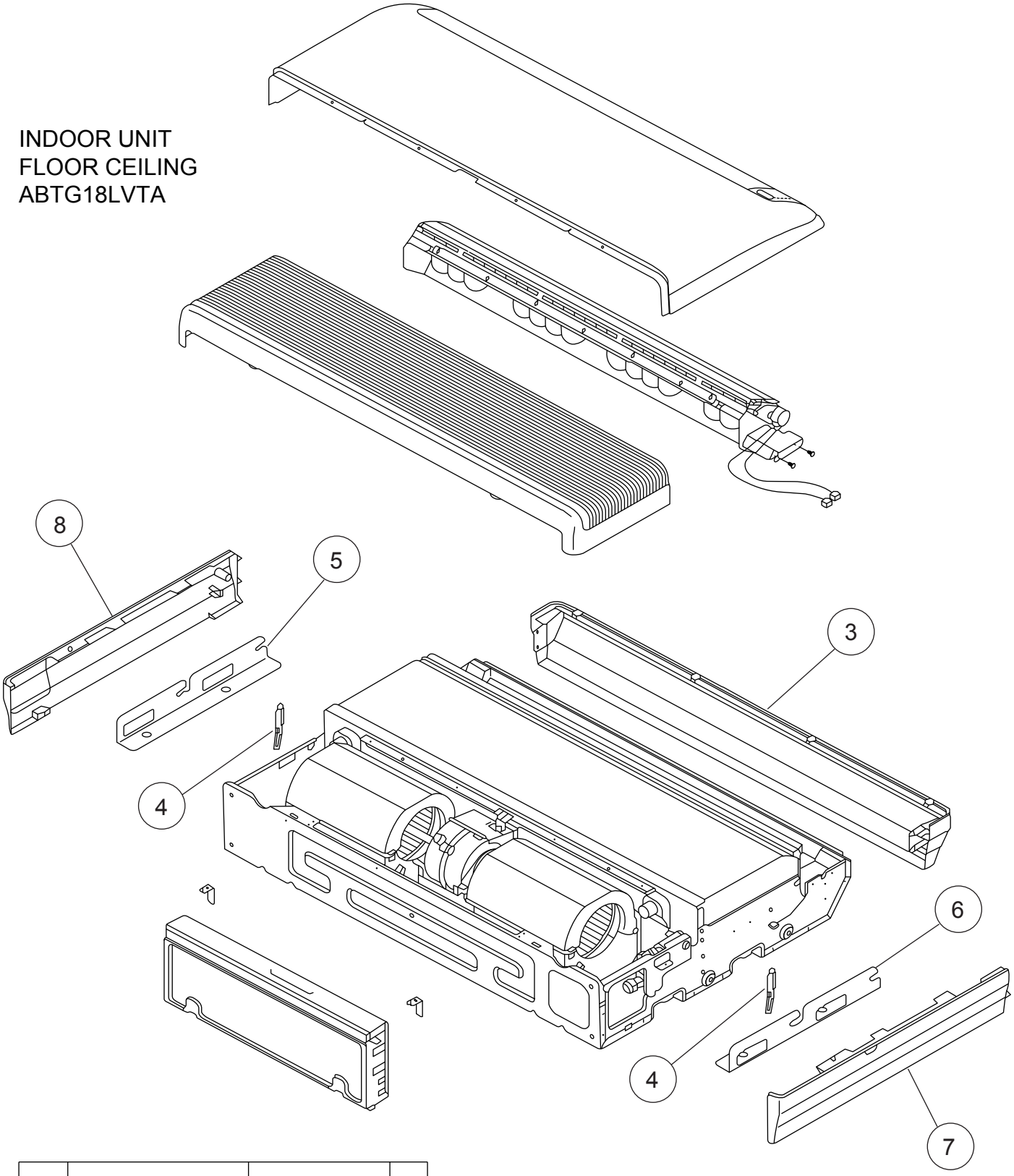

Ref.	Description	Part number	
1	Remote	9379219037	
2	Remote Holder	9305642045	
3	Top Cover	9358534021	
4	Arm	9358565001	
5	Hanger Bracket L	9358596005	
6	Hanger Bracket R	9358595008	
7	Cosmetic Panel R	9358535028	
8	Cosmetic Panel L	9358536025	

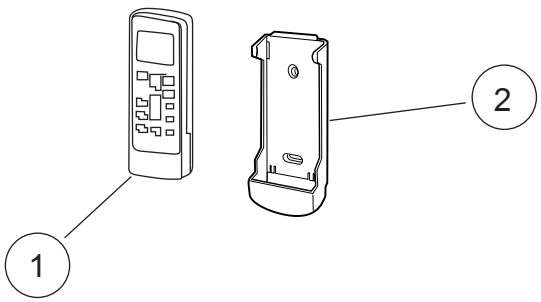

INDOOR UNIT
FLOOR / CEILING
ABTG18LVTA
Panel assy

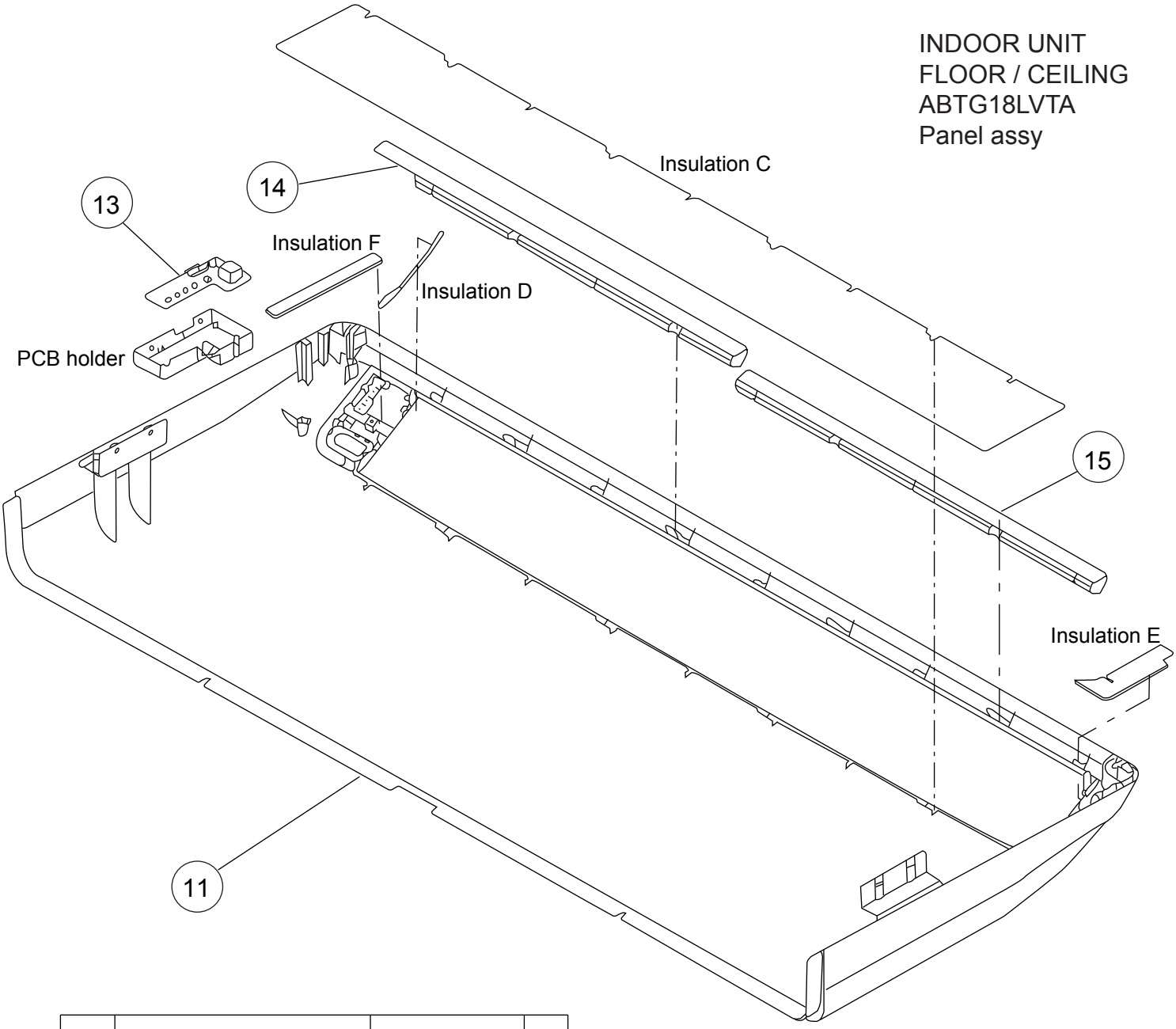

Ref.	Description	Part number	
11	Panel	9358531259	
12	Side Cover R Assy	9359069102	
13	Indicator PCB Assy	9705798090	
14	Insulation (Panel) A	9358574003	
15	Insulation (Panel) B	9358914007	
--	Panel Assy (with side cover R)	9359076322	

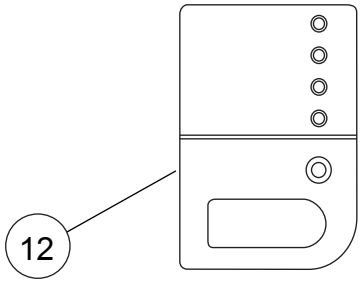

INDOOR UNIT
FLOOR / CEILING
ABTG18LVTA
Grille

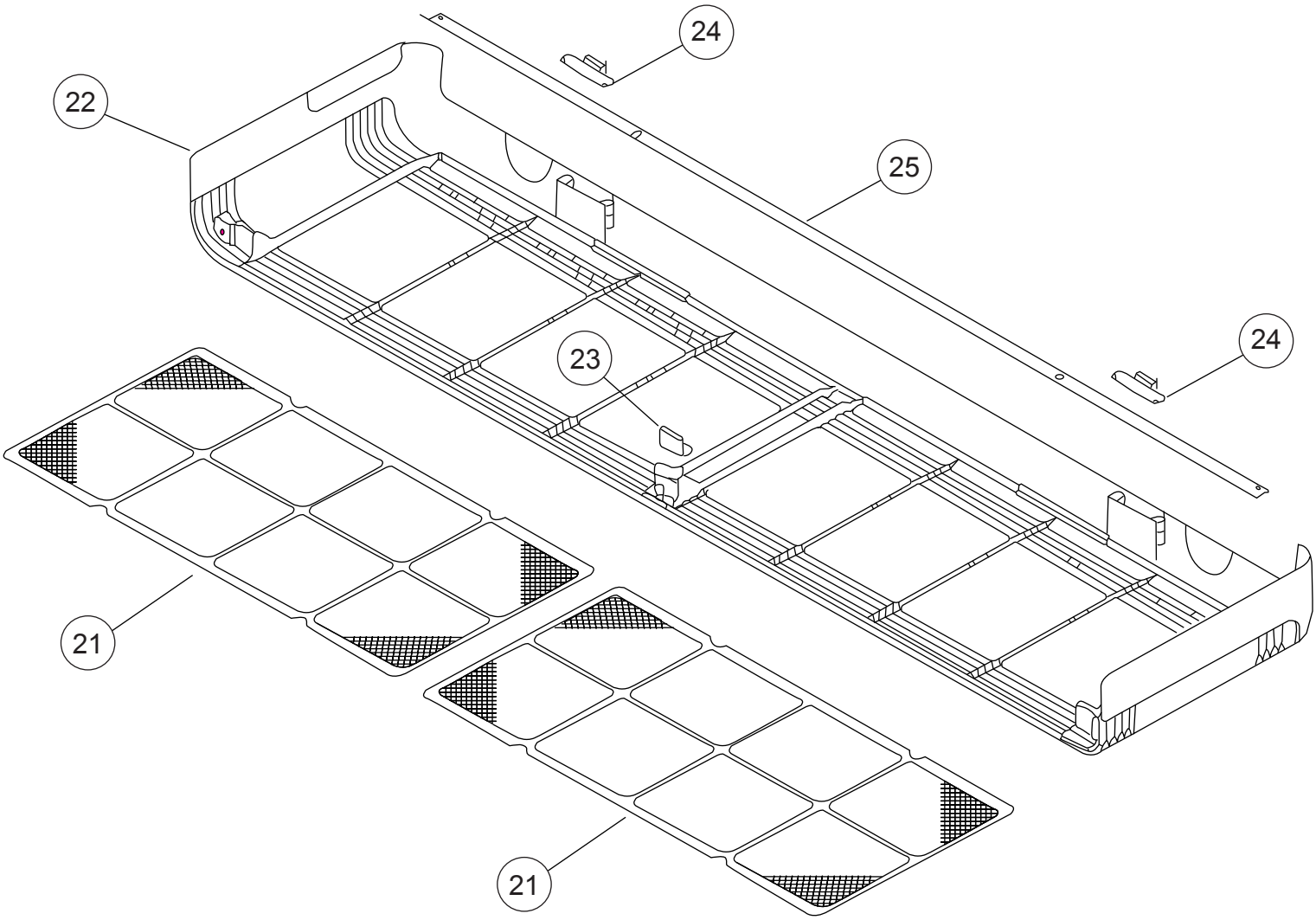

Ref.	Description	Part number	
21	Air Filter	9358567029	
22	Grill F	9358532027	
23	Arm Bracket	9359281009	
24	Grille Support	9358602003	
25	Filter Bracket	9358607008	

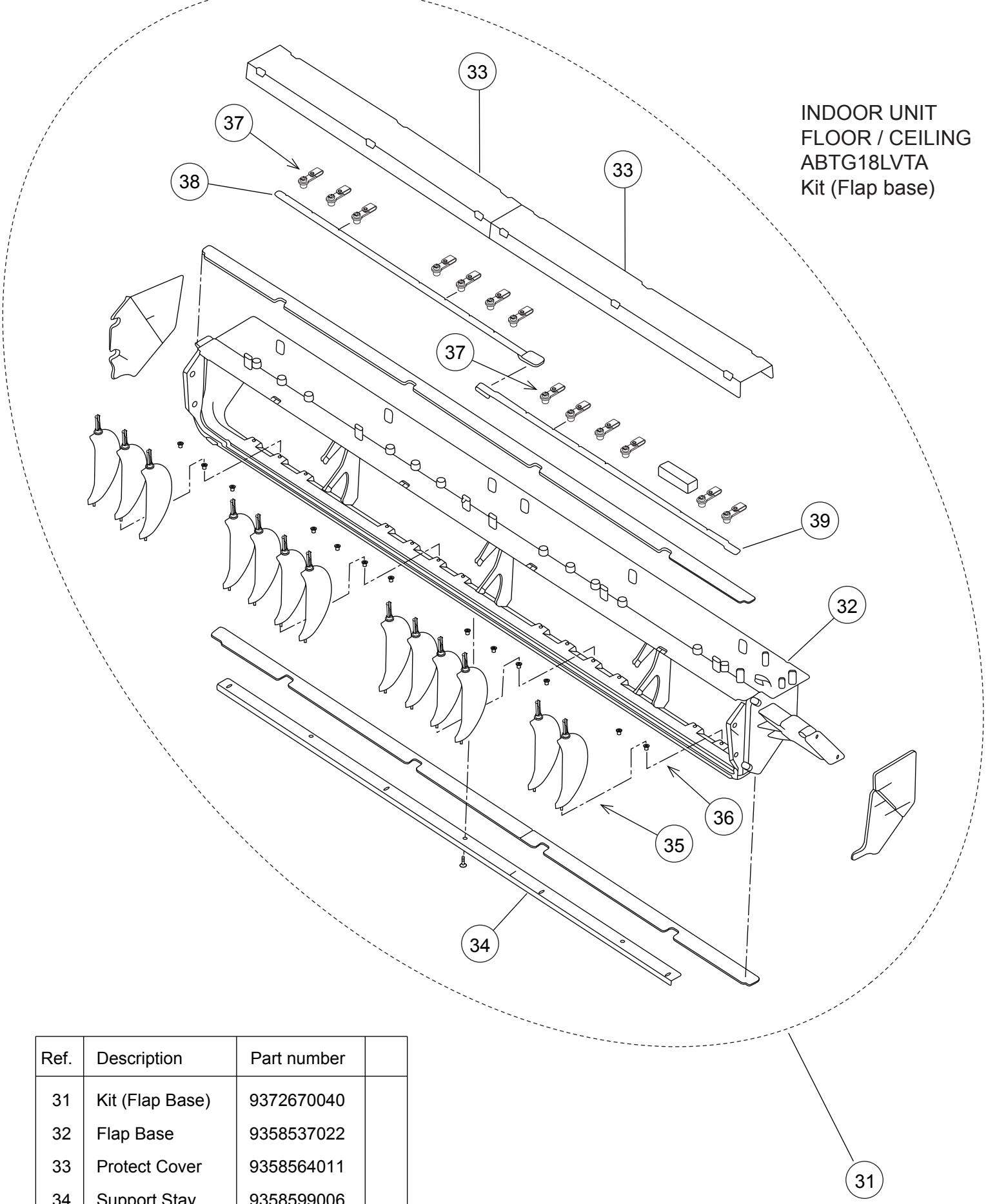

Ref.	Description	Part number	
31	Kit (Flap Base)	9372670040	
32	Flap Base	9358537022	
33	Protect Cover	9358564011	
34	Support Stay	9358599006	
35	Louver	9358561027	
36	Bushing B	9358554005	
37	Louver Stopper	9358555002	
38	Louver Rod	9358559017	
39	Motor Rod	9358560013	

INDOOR UNIT
FLOOR / CEILING
ABTG18LVTA
Flap base sub assy

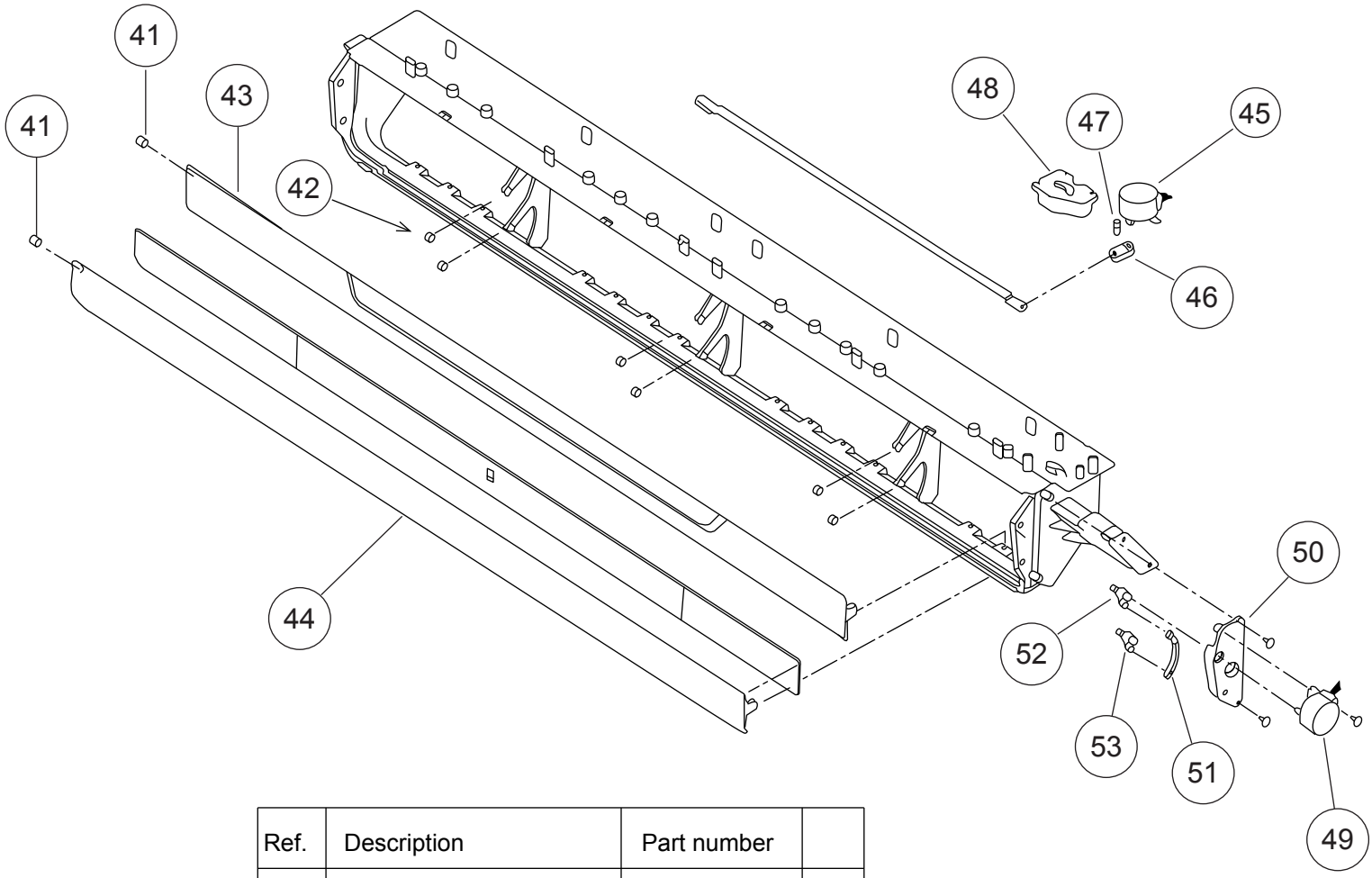

Ref.	Description	Part number	
41	Bushing	9357942001	
42	Bushing C	9358553008	
43	Flap (Upper) F	9358538029	
44	Kit (Flap Lower)	9372671023	
45	Step Motor H	9900297015	
46	Louver Link	9358556009	
47	Louver Shaft	9358557006	
48	Louver Link Cover	9358558010	
49	Step Motor-V	9900362010	
50	Motor Base	9358562017	
51	Motor Rod-A (Step V)	9358550007	
52	Flap Link-Upper (Step V)	9358551004	
53	Flap Link-Lower (Step V)	9358552001	

INDOOR UNIT
FLOOR / CEILING
ABTG18LVTA
Base assy

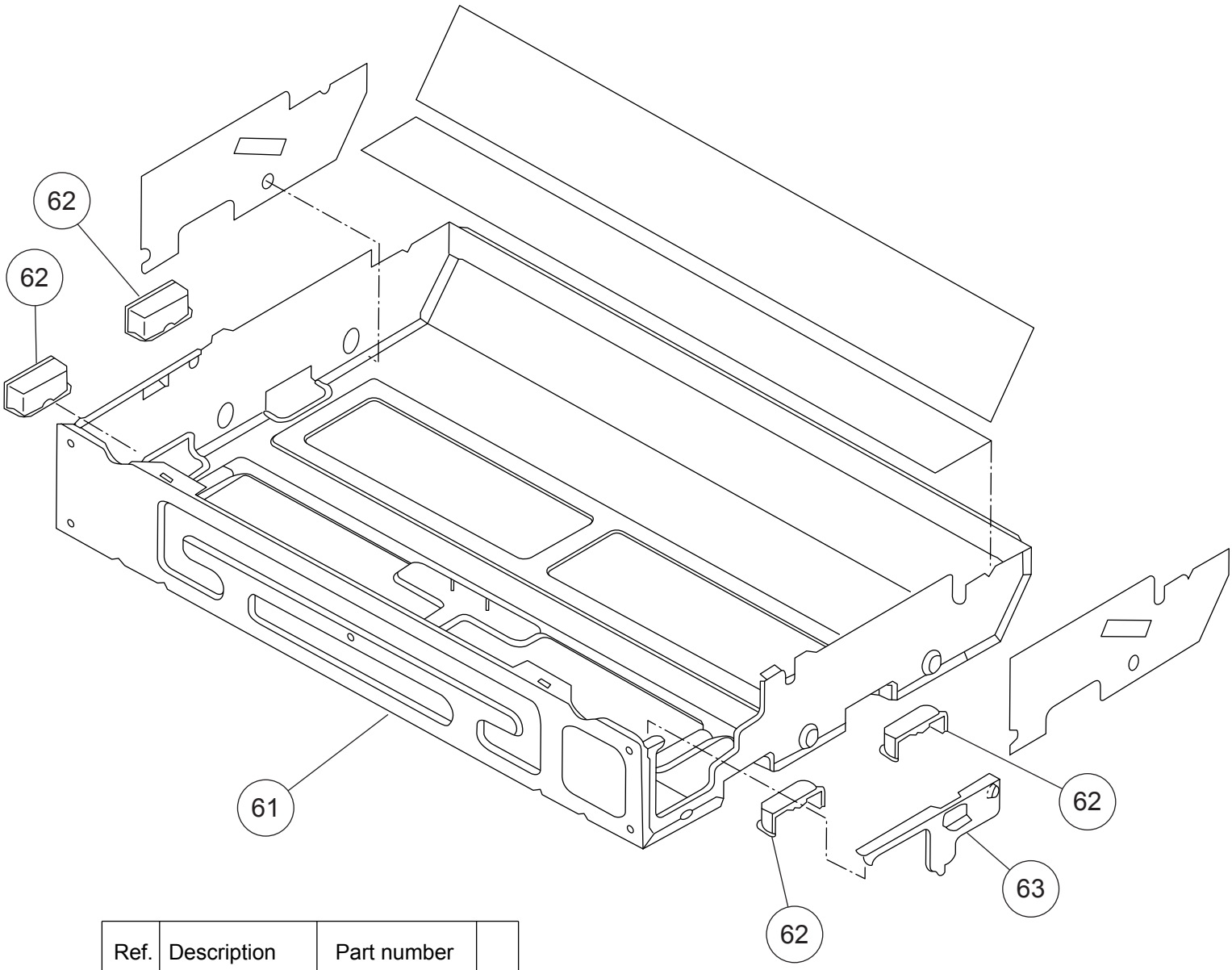

Ref.	Description	Part number	
61	Base Assy	9359061014	
62	Cap	9358563007	
63	Base Bracket	9358586006	

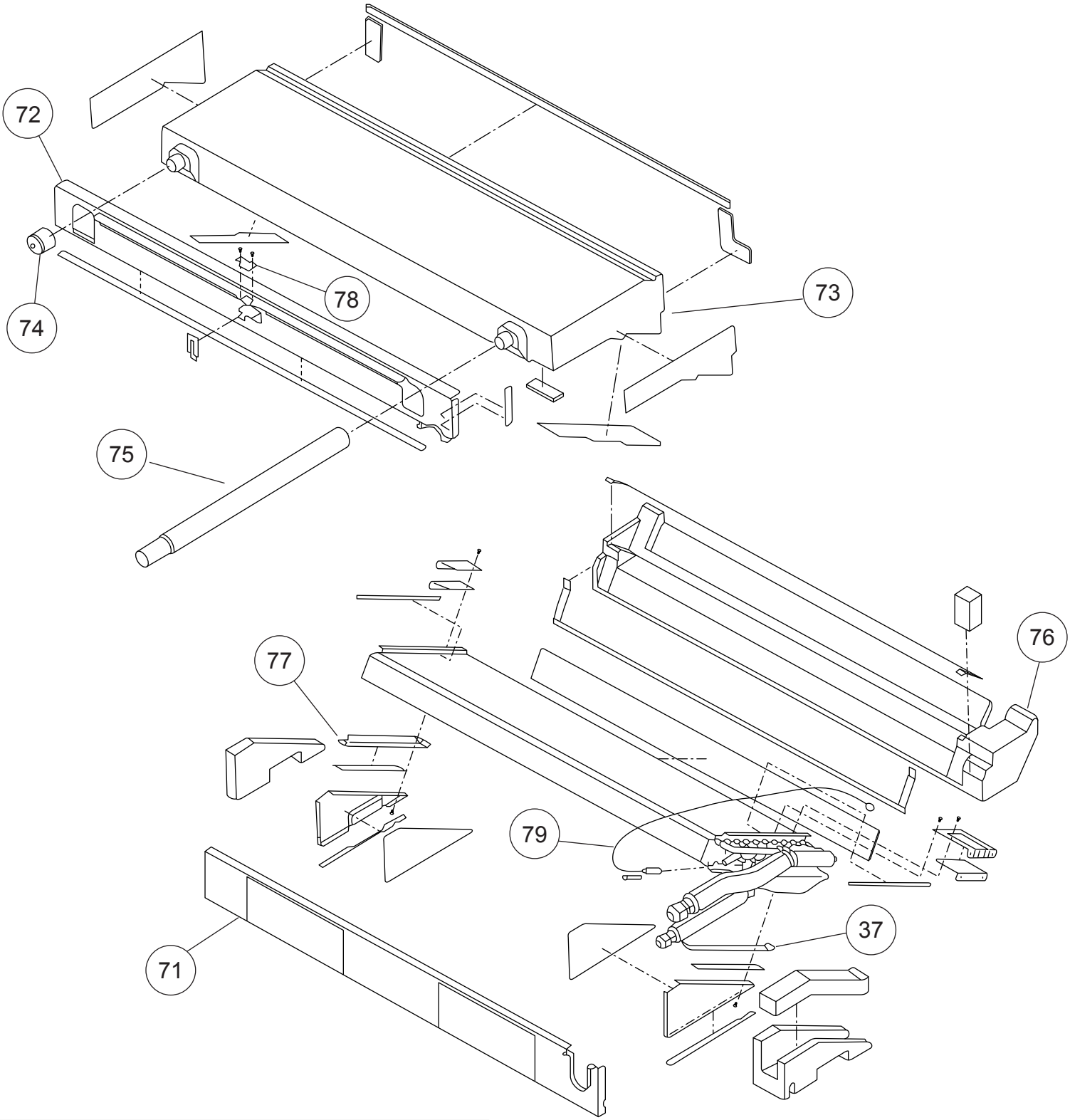

Ref.	Description	Part number	
71	Kit (Separate Wall A)	9372666012	
72	Kit (Separate Wall B)	9373448013	
73	Kit (Drain Pan Assy)	9372669013	
74	Drain Cap	9358746004	
75	Drain Hose Assy	9377785060	
76	Kit (Insulation Flap Base)	9372672013	
77	Kit (Dew Proof Plate)	9372673010	
78	Catch	9359096009	
79	Pipe Thermistor	9900022020	

INDOOR UNIT
FLOOR / CEILING
ABTG18LVTA
Drain pan assy
Evaporator

INDOOR UNIT
FLOOR / CEILING
ABTG18LVTA
Evaporator

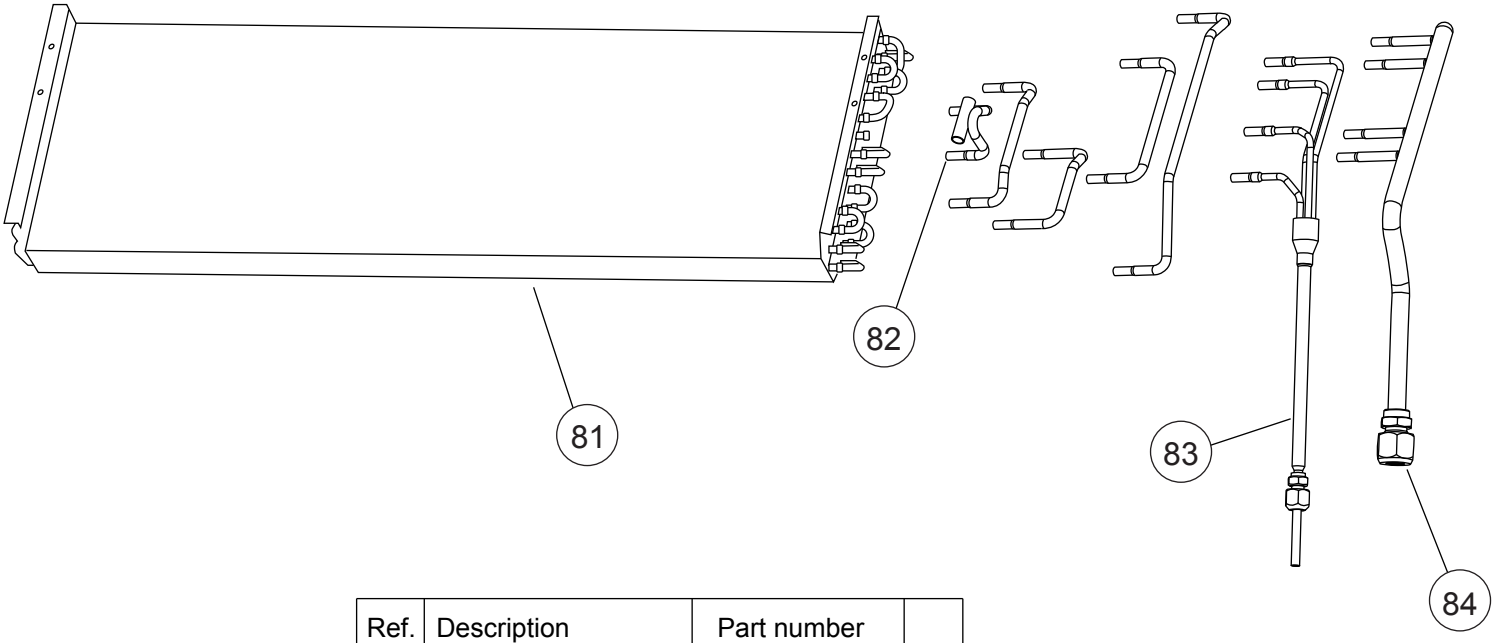

Ref.	Description	Part number	
81	Evaporator Assy	9362513043	
82	Bypass Pipe Assy	9377819017	
83	Distributor Assy	9380354000	
84	Coupling Pipe Assy	9380355007	

INDOOR UNIT
FLOOR / CEILING
ABTA18LVTA
Fan motor

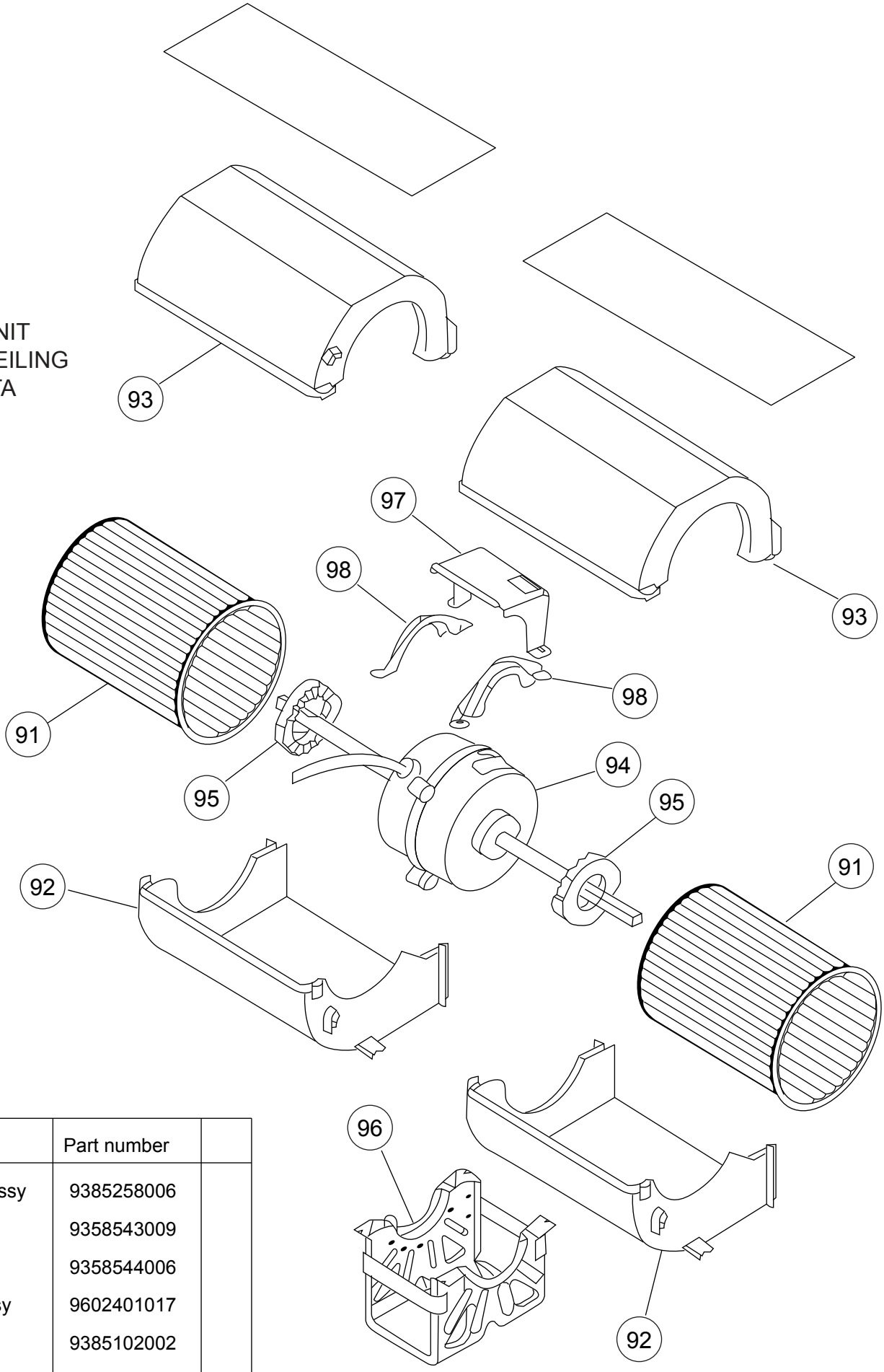

Ref.	Description	Part number	
91	Sirocco Fan Assy	9385258006	
92	Casing	9358543009	
93	Casing Cover	9358544006	
94	Fan Motor Assy	9602401017	
95	Rubber	9385102002	
96	Motor Fixing Table	9358591000	
97	Protector	9359282006	
98	Motor Fixture	9358594001	

INDOOR UNIT
FLOOR / CEILING
ABTG18LVTA
Control unit

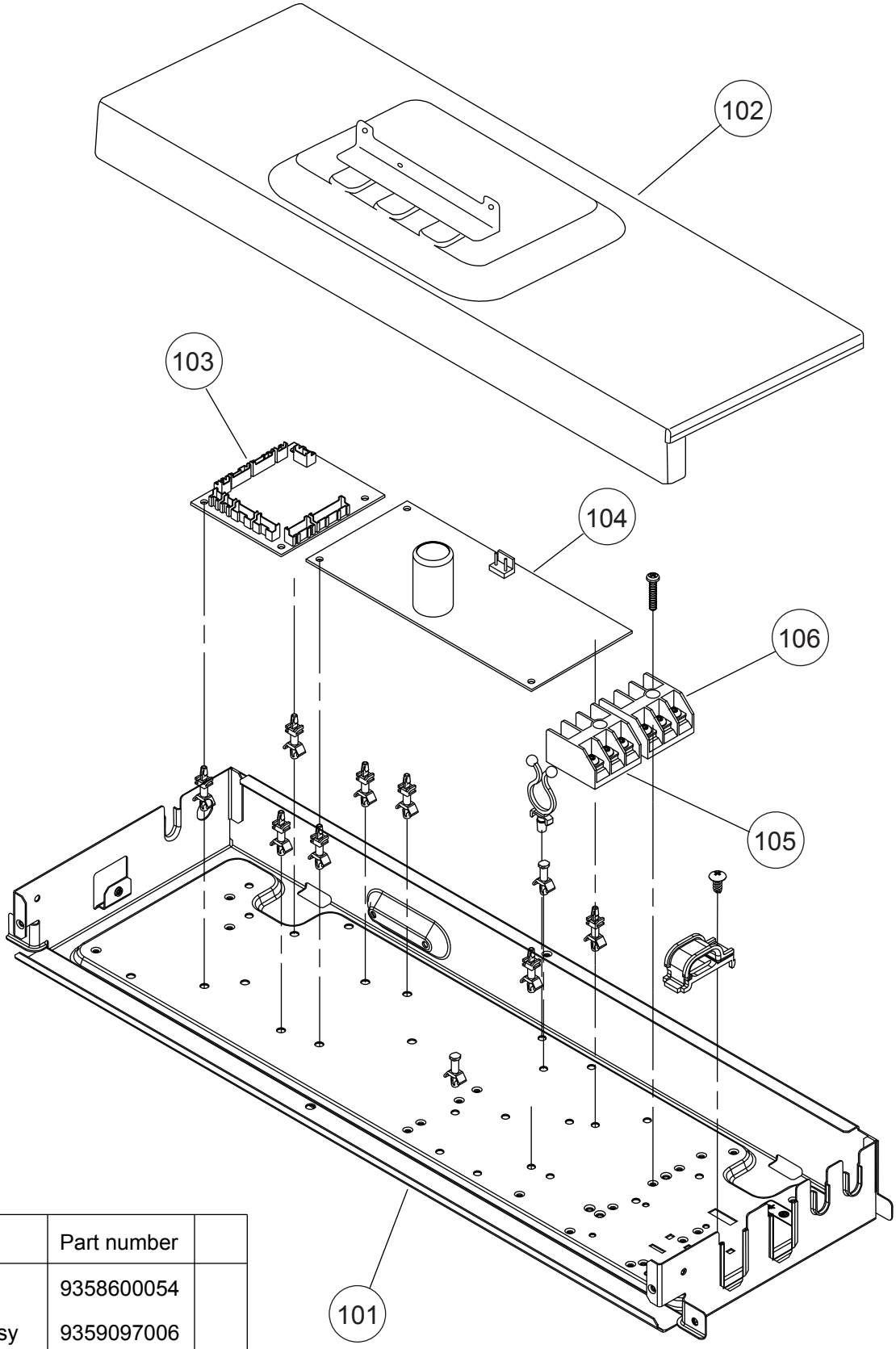

Ref.	Description	Part number	
101	Control Box	9358600054	
102	Control Box Cover Assy	9359097006	
103	Controller PCB Assy	9707393859	
104	Power Supply PCB Assy	9707398274	
105	Terminal 3P	9306489045	
106	Terminal 3P	9703345012	
--	Room Thermistor Assy	9703299087	

ACCESSORIES

OUTDOOR UNIT

Name and Shape	Q'ty	Application
Drain pipe 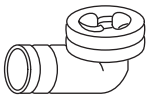	1	For outdoor unit drain piping work (May not be supplied, depending on the model.)
Drain cap 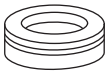	2	
Putty	1	For filling in a gap at the entrance of connection cords.
Adapter G (1/2"→5/8") 12.7mm → 15.88mm 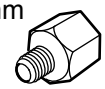	1	For connecting a pipe with different diameter to the outdoor unit.
Adapter D (1/2"→3/8") 12.7mm → 9.52mm	2	

INDOOR UNIT
COMPACT WALL MOUNTED
ASTG07LVCA, ASTG09LVCA
ASTG12LVCA, ASTG12LVCB

Name and Shape	Q'ty
Wall hook bracket	1
Remote control	1
Battery	2
Remote control holder	1
Cloth tape	1
Tapping screw (big)	8
Tapping screw (small)	2
Air cleaning filter	2

INDOOR UNIT
COMPACT WALL MOUNTED
ASTG09LUCA, ASTG14LUCA

Name and Shape	Q'ty
Bracket panel	1
Remote control	1
Remote control holder	1
Battery (penlight)	2
Cloth tape	1
Tapping screw (big)	8
Tapping screw (small)	2
Air cleaning filter	2

WALL MOUNTED
ASTG18LFCA, ASTG24LFCA
ASTG24LFCB

Name and Shape	Q'ty
Wall hook bracket	1
Remote control	1
Battery	2
Remote control holder	1
Drain hose insulation	1
Cloth tape	1
Tapping screw (big)	8
Tapping screw (small)	2
Air cleaning filter	2
Air cleaning filter frame	2

INDOOR UNIT
COMPACT CASSETTE
AUTG09, 12, 18LVLA

Name and Shape	Q'ty	Application
Coupler heat insulation (Large)	1	For indoor side pipe joint (Gas pipe)
Coupler heat insulation (Small)	1	For indoor side pipe joint (Liquid pipe)
Special nut A (Large ßange)	4	For installing indoor unit
Special nut B (Small ßange)	4	For installing indoor unit
Template (Carton top)	1	For cealing openings cutting Also used as packing
Drain hose	1	For installing drain pipe
Hose Band	1	For installing drain hose
Drain hose insulation	1	For installing drain pipe
Remote control	1	For air conditioner operation
Battery	2	For remote control
Remote control holder	1	For installing the remote control
Tapping screw (M3 × 12mm)	2	For mounting the remote control holder
Binder	2	For electrical wiring
Wire clamper	1	For electrical wiring

DECORATION PANEL
UTG-UFYD-W

Name and Shape	Q'ty	Application
Connector cover	1	For covering connector
Tapping Screw (M5 × 12 mm)	4	For mounting decora-tion panel
Tapping Screw (M4 × 12 mm)	1	For mounting connec-tor cover
L angle	2	For mounting the Hook Wire to the Decoration panel
Hook wire	2	For suspending the Decoration panel
Screw [pitch small] (M4 × 10 mm)	2	For mounting the Hook Wire (for metals)
Screw [pitch large] (M4 × 10 mm)	4	For mounting the L angle and Hook wire (for resins)

INDOOR UNIT
SLIM DUCT
ARTG09LLTA
ARTG12LLTA
ARTG18LLTA

Name and Shape	Q'ty	Application
Installation template	1	For positioning the indoor unit
Washer	8	For installing indoor unit
Coupler heat insulation (Large)	1	For indoor side pipe joint (Large pipe)
Coupler heat insulation (Small)	1	For indoor side pipe joint (Small pipe)
Binder	Medium 3	For power supply and remote control cable binding.
	Large 4	For fixing the coupler heat insulation.
Filter (Small)	2	For ARTG09LLTA, ARTG12LLTA
Filter (Big)	2	For ARTG18LLTA
Drain hose	1	For installing drain pipe VP25 (O.D. 32, I.D. 26)
Hose band	1	For installing drain hose
Drain hose insulation B	1	Insulates the drain hose
Wired remote control	1	
Tapping screw (M4 × 16 mm)	2	For installing the remote control

INDOOR UNIT
FLOOR / CEILING
ABTG18LVTA

Name and Shape	Q'ty	Name and Shape	Q'ty
Cover plate (left)	1	Cover plate (right)	1
Screw (M4 × 10 mm)	2	Installation template Positioning for under ceiling type	1
Bracket (left) For suspending the indoor unit from ceiling	1	Bracket (right) For suspending the indoor unit from ceiling	1
Anchor bolt (M12) For suspending the indoor unit from ceiling	4	Spring washer For suspending the indoor unit from ceiling	4
Special nut For suspending the indoor unit from ceiling	4	Wall bracket For suspending the indoor unit on the wall	2
Screw (M4 × 20 mm) For fixing the wall bracket	6	Coupler heat insulator (large) For indoor side pipe joint(Large pipe)	1
Coupler heat insulator (small) For indoor side pipe joint (Small pipe)	1	Binder (large) For fixing the drain hose	1
Binder (small) For electrical wiring	2	Wire clamper For electrical wiring	1
Drain hose	1	Hose band For installing drain hose	1
Insulation (drain hose) Adhesive type 100 x 220 mm	1	VT wire For fixing the drain hose L 280 mm	1
Remote control For air conditioner operation	1	Battery For remote control	2
Remote control holder	1	Screw (M3 × 12 mm) For remote control holder installation	2

1101G3868